Products marked ⓘ will be discontinued September 30, 2013

VDE 1c, 2c, 4c

Panasonic
ideas for life

Relay for control panel of 1 A to 10 A (1c/2c/3c/4c)

HC RELAYS

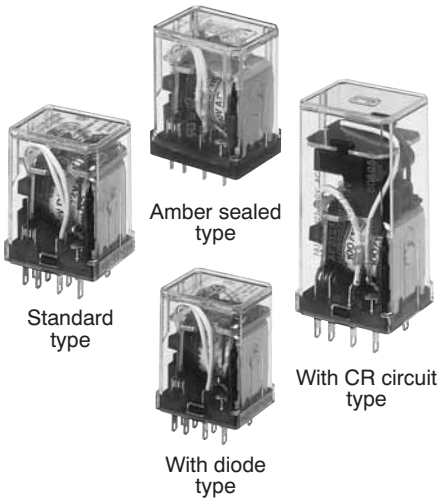

ⓘ CR circuit type will be discontinued September 30, 2013.

FEATURES

1. **Standard type and amber sealed type**
2. **Rich lineup includes relays with operating indication, with diode and with ⓘ CR circuit**
3. **Full range of types**
   Plug-in type, PC board type and TM type
4. **Sockets and terminal sockets are available.**

TYPICAL APPLICATIONS

1. **Factory automation equipment and automotive devices**
2. **Control panels, power supply equipment, molding equipment, machine tools, welding equipment, agricultural equipment, etc.**
3. **Office equipment, automatic vending machines, telecommunications equipment, disaster prevention equipment, copiers, measuring devices, medical equipment, amusement devices, etc.**
4. **All types of household appliance**

ORDERING INFORMATION

HC □ - □ - □ - □ - □ - □

Contact arrangement
1: 1 Form C
2: 2 Form C
3: 3 Form C
4: 4 Form C
4D: Bifurcated contact (twin)

Nil: Standard type
E: Amber sealed type (Only 1 Form C and 2 Form C)
ED: Amber sealed type bifurcated contact (twin) (Only 4 Form C)

Terminal arrangement
H: Plug-in type
HL: Plug-in with LED indication
L: Plug-in with LED indication (Amber sealed type)
HP: PC board type
PL: PC board with LED indication
HPL: PC board with LED indication (Amber sealed type)
HTM: TM type

Nominal coil voltage
AC 6, 12, 24, 48, 100 (100/110), 120 (110/120), 200 (200/220), 240 (220/240) V
DC 6, 12, 24, 48, 100 (100/110) V

Surge suppression
D: With diode R: With CR circuit

Contact material

Contact arrangement \ Contact material	$AgSnO_2$ type	AgNi type
1 Form C	F	
2 Form C	F	
3 Form C	F	
4 Form C		Nil
4-pole bifurcated (twin)		Nil

Notes: Certified by UL and CSA (except for keep type)
Please consult us about VDE (1 Form C, 2 Form C, and 4 Form C only) and TV-3 (1 Form C and 2 Form C only) approved products.

ⓘ CR circuit type will be discontinued September 30, 2013.

LINEUP

Type	Contact arrangement		Plug-in terminal type		PC board terminal type		Top mounting type (TM type)	Remarks
			Without LED	With LED	Without LED	With LED		
HC relay Standard type	Single side stable	1 Form C	A	A	A	A	A	
		2 Form C	A	A	A	A	A	
		3 Form C	A	A	A	A	A	
		4 Form C	A	A	A	A	A	
	Bifurcated (Twin)	4 Form C	A	A	A	A	A	
HC relay Amber sealed type	Single side stable	1 Form C	A	A	A	A	A	
		2 Form C	A	A	A	A	A	
		4 Form C	A	A	A	A	A	
	Bifurcated (Twin)	4 Form C	A	A	A	A	A	
DC type with surge absorbing diode	Single side stable	1 Form C	A	A	—	—	—	Amber sealed type also available
		2 Form C	A	A	—	—	—	
		3 Form C	A	A	—	—	—	
		4 Form C	A	A	—	—	—	
	Bifurcated (Twin)	4 Form C	A	A	—	—	—	
ⓘ AC type with surge absorbing CR circuit	Single side stable	1 Form C	A	A	—	—	—	17 mm higher than standard type
		2 Form C	A	A	—	—	—	
		3 Form C	A	A	—	—	—	
		4 Form C	A	A	—	—	—	
	Bifurcated (Twin)	4 Form C	A	A	—	—	—	

A: Available
Notes: 1. HC relays with ground terminals also available.
2. HC relays with 0.9 mm wide PC board terminals also available.

HC RELAY CONTACT ARRANGEMENT

Type	Single side stable contact	4-pole bifurcated (twin) contact
Part number	HC❒	HC4D
Features	Suitable for high-capacity load switching Standard type HC relays have high single-contact capacity; 1 Form C: 10 A 2 Form C and 3 Form C: 7 A 4 Form C: 5 A	Bifurcated (twin) contact ensures high contact reliability Suitable for low level loads Minimum switching capability: 100 μA 100m V DC (reference value)

LED INDICATION TYPE

Type	With LED indication type
Part number	HC❒-HL
Features	LED lights up when relay is operating Inspection and detection of trouble is easy. LEDs are green for DC types and red for AC types. All types are available with LED indication.

• LED colors indicate the type of relay: red for AC type and green for DC type.

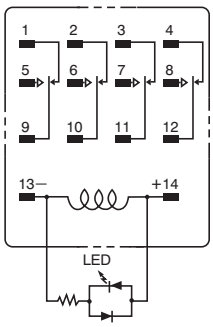

Protection diode (Bottom view)

HC RELAY SERIES PRODUCT TYPES

Type	Amber sealed type HC relay	HC relay with diode type (for DC)
Part number	HC❐E	HC❐-❐-❐V-D
Features	Relay is completely sealed with resin. Provides high reliability in adverse surroundings. Suitable for use in dusty conditions or where organic gases are present	Has built-in diode to absorb surge when the coil goes to the off state (for DC type). Suitable for protecting relay driver circuits and for noise suppression Diode characteristics: Reverse breakdown voltage 1,000 V Forward current 1 A
Type	ⓘ HC relay with CR circuit (for AC)	—
Part number	HC❐-❐-❐V-R	—
Features	Has built-in CR circuit to absorb surge when the coil goes to the off state (for AC). Relay with CR circuit is 17 mm higher than standard type relay.	—

4-pole bifurcated (twin) type and Relay with LED indication are available.

TYPES

1. Standard type

1) Plug-in type

Nominal coil voltage	1 Form C	2 Form C	3 Form C	4 Form C	4 Form C (twin)
	Part No.	Part No.	Part No.	Part No.	Part No.
6V AC	HC1-H-AC6V-F	HC2-H-AC6V-F	HC3-H-AC6V-F	HC4-H-AC6V	HC4D-H-AC6V
12V AC	HC1-H-AC12V-F	HC2-H-AC12V-F	HC3-H-AC12V-F	HC4-H-AC12V	HC4D-H-AC12V
24V AC	HC1-H-AC24V-F	HC2-H-AC24V-F	HC3-H-AC24V-F	HC4-H-AC24V	HC4D-H-AC24V
48V AC	HC1-H-AC48V-F	HC2-H-AC48V-F	HC3-H-AC48V-F	HC4-H-AC48V	HC4D-H-AC48V
100/110V AC	HC1-H-AC100V-F	HC2-H-AC100V-F	HC3-H-AC100V-F	HC4-H-AC100V	HC4D-H-AC100V
110/120V AC	HC1-H-AC120V-F	HC2-H-AC120V-F	HC3-H-AC120V-F	HC4-H-AC120V	HC4D-H-AC120V
200/220V AC	HC1-H-AC200V-F	HC2-H-AC200V-F	HC3-H-AC200V-F	HC4-H-AC200V	HC4D-H-AC200V
220/240V AC	HC1-H-AC240V-F	HC2-H-AC240V-F	HC3-H-AC240V-F	HC4-H-AC240V	HC4D-H-AC240V
6V DC	HC1-H-DC6V-F	HC2-H-DC6V-F	HC3-H-DC6V-F	HC4-H-DC6V	HC4D-H-DC6V
12V DC	HC1-H-DC12V-F	HC2-H-DC12V-F	HC3-H-DC12V-F	HC4-H-DC12V	HC4D-H-DC12V
24V DC	HC1-H-DC24V-F	HC2-H-DC24V-F	HC3-H-DC24V-F	HC4-H-DC24V	HC4D-H-DC24V
48V DC	HC1-H-DC48V-F	HC2-H-DC48V-F	HC3-H-DC48V-F	HC4-H-DC48V	HC4D-H-DC48V
100/110V DC	HC1-H-DC100V-F	HC2-H-DC100V-F	HC3-H-DC100V-F	HC4-H-DC100V	HC4D-H-DC100V

Standard packing: Carton: 20 pcs.; Case: 200 pcs.

2) Plug-in type (with LED indication)

Nominal coil voltage	1 Form C	2 Form C	3 Form C	4 Form C	4 Form C (twin)
	Part No.	Part No.	Part No.	Part No.	Part No.
6V AC	HC1-HL-AC6V-F	HC2-HL-AC6V-F	HC3-HL-AC6V-F	HC4-HL-AC6V	HC4D-HL-AC6V
12V AC	HC1-HL-AC12V-F	HC2-HL-AC12V-F	HC3-HL-AC12V-F	HC4-HL-AC12V	HC4D-HL-AC12V
24V AC	HC1-HL-AC24V-F	HC2-HL-AC24V-F	HC3-HL-AC24V-F	HC4-HL-AC24V	HC4D-HL-AC24V
100/110V AC	HC1-HL-AC100V-F	HC2-HL-AC100V-F	HC3-HL-AC100V-F	HC4-HL-AC100V	HC4D-HL-AC100V
110/120V AC	HC1-HL-AC120V-F	HC2-HL-AC120V-F	HC3-HL-AC120V-F	HC4-HL-AC120V	HC4D-HL-AC120V
200/220V AC	HC1-HL-AC200V-F	HC2-HL-AC200V-F	HC3-HL-AC200V-F	HC4-HL-AC200V	HC4D-HL-AC200V
220/240V AC	HC1-HL-AC240V-F	HC2-HL-AC240V-F	HC3-HL-AC240V-F	HC4-HL-AC240V	HC4D-HL-AC240V
6V DC	HC1-HL-DC6V-F	HC2-HL-DC6V-F	HC3-HL-DC6V-F	HC4-HL-DC6V	HC4D-HL-DC6V
12V DC	HC1-HL-DC12V-F	HC2-HL-DC12V-F	HC3-HL-DC12V-F	HC4-HL-DC12V	HC4D-HL-DC12V
24V DC	HC1-HL-DC24V-F	HC2-HL-DC24V-F	HC3-HL-DC24V-F	HC4-HL-DC24V	HC4D-HL-DC24V
48V DC	HC1-HL-DC48V-F	HC2-HL-DC48V-F	HC3-HL-DC48V-F	HC4-HL-DC48V	HC4D-HL-DC48V
100/110V DC	HC1-HL-DC100V-F	HC2-HL-DC100V-F	HC3-HL-DC100V-F	HC4-HL-DC100V	HC4D-HL-DC100V

Standard packing: Carton: 20 pcs.; Case: 200 pcs.

3) PC board type

Nominal coil voltage	1 Form C	2 Form C	3 Form C	4 Form C	4 Form C (twin)
	Part No.	Part No.	Part No.	Part No.	Part No.
6V AC	HC1-HP-AC6V-F	HC2-HP-AC6V-F	HC3-HP-AC6V-F	HC4-HP-AC6V	HC4D-HP-AC6V
12V AC	HC1-HP-AC12V-F	HC2-HP-AC12V-F	HC3-HP-AC12V-F	HC4-HP-AC12V	HC4D-HP-AC12V
24V AC	HC1-HP-AC24V-F	HC2-HP-AC24V-F	HC3-HP-AC24V-F	HC4-HP-AC24V	HC4D-HP-AC24V
48V AC	HC1-HP-AC48V-F	HC2-HP-AC48V-F	HC3-HP-AC48V-F	HC4-HP-AC48V	HC4D-HP-AC48V
100/110V AC	HC1-HP-AC100V-F	HC2-HP-AC100V-F	HC3-HP-AC100V-F	HC4-HP-AC100V	HC4D-HP-AC100V
110/120V AC	HC1-HP-AC120V-F	HC2-HP-AC120V-F	HC3-HP-AC120V-F	HC4-HP-AC120V	HC4D-HP-AC120V
200/220V AC	HC1-HP-AC200V-F	HC2-HP-AC200V-F	HC3-HP-AC200V-F	HC4-HP-AC200V	HC4D-HP-AC200V
220/240V AC	HC1-HP-AC240V-F	HC2-HP-AC240V-F	HC3-HP-AC240V-F	HC4-HP-AC240V	HC4D-HP-AC240V
6V DC	HC1-HP-DC6V-F	HC2-HP-DC6V-F	HC3-HP-DC6V-F	HC4-HP-DC6V	HC4D-HP-DC6V
12V DC	HC1-HP-DC12V-F	HC2-HP-DC12V-F	HC3-HP-DC12V-F	HC4-HP-DC12V	HC4D-HP-DC12V
24V DC	HC1-HP-DC24V-F	HC2-HP-DC24V-F	HC3-HP-DC24V-F	HC4-HP-DC24V	HC4D-HP-DC24V
48V DC	HC1-HP-DC48V-F	HC2-HP-DC48V-F	HC3-HP-DC48V-F	HC4-HP-DC48V	HC4D-HP-DC48V
100/110V DC	HC1-HP-DC100V-F	HC2-HP-DC100V-F	HC3-HP-DC100V-F	HC4-HP-DC100V	HC4D-HP-DC100V

Standard packing: Carton: 20 pcs.; Case: 200 pcs.
Note: Please add “-31” before “-F” in the part number when ordering the PC board type 0.9 mm width terminal (ex) HC1-HP-AC6V-31-F.

4) PC board type (with LED indication)

Nominal coil voltage	1 Form C	2 Form C	3 Form C	4 Form C	4 Form C (twin)
	Part No.	Part No.	Part No.	Part No.	Part No.
6V AC	HC1-HPL-AC6V-F	HC2-HPL-AC6V-F	HC3-HPL-AC6V-F	HC4-HPL-AC6V	HC4D-HPL-AC6V
12V AC	HC1-HPL-AC12V-F	HC2-HPL-AC12V-F	HC3-HPL-AC12V-F	HC4-HPL-AC12V	HC4D-HPL-AC12V
24V AC	HC1-HPL-AC24V-F	HC2-HPL-AC24V-F	HC3-HPL-AC24V-F	HC4-HPL-AC24V	HC4D-HPL-AC24V
100/110V AC	HC1-HPL-AC100V-F	HC2-HPL-AC100V-F	HC3-HPL-AC100V-F	HC4-HPL-AC100V	HC4D-HPL-AC100V
110/120V AC	HC1-HPL-AC120V-F	HC2-HPL-AC120V-F	HC3-HPL-AC120V-F	HC4-HPL-AC120V	HC4D-HPL-AC120V
200/220V AC	HC1-HPL-AC200V-F	HC2-HPL-AC200V-F	HC3-HPL-AC200V-F	HC4-HPL-AC200V	HC4D-HPL-AC200V
6V DC	HC1-HPL-DC6V-F	HC2-HPL-DC6V-F	HC3-HPL-DC6V-F	HC4-HPL-DC6V	HC4D-HPL-DC6V
12V DC	HC1-HPL-DC12V-F	HC2-HPL-DC12V-F	HC3-HPL-DC12V-F	HC4-HPL-DC12V	HC4D-HPL-DC12V
24V DC	HC1-HPL-DC24V-F	HC2-HPL-DC24V-F	HC3-HPL-DC24V-F	HC4-HPL-DC24V	HC4D-HPL-DC24V
48V DC	HC1-HPL-DC48V-F	HC2-HPL-DC48V-F	HC3-HPL-DC48V-F	HC4-HPL-DC48V	HC4D-HPL-DC48V
100/110V DC	HC1-HPL-DC100V-F	HC2-HPL-DC100V-F	HC3-HPL-DC100V-F	HC4-HPL-DC100V	HC4D-HPL-DC100V

Standard packing: Carton: 20 pcs.; Case: 200 pcs.
Note: Please add “-31” before “-F” in the part number when ordering the PC board type 0.9 mm width terminal (ex) HC1-HPL-AC6V-31-F.

5) TM type

Nominal coil voltage	1 Form C	2 Form C	3 Form C	4 Form C	4 Form C (twin)
	Part No.	Part No.	Part No.	Part No.	Part No.
6V AC	HC1-HTM-AC6V-F	HC2-HTM-AC6V-F	HC3-HTM-AC6V-F	HC4-HTM-AC6V	HC4D-HTM-AC6V
12V AC	HC1-HTM-AC12V-F	HC2-HTM-AC12V-F	HC3-HTM-AC12V-F	HC4-HTM-AC12V	HC4D-HTM-AC12V
24V AC	HC1-HTM-AC24V-F	HC2-HTM-AC24V-F	HC3-HTM-AC24V-F	HC4-HTM-AC24V	HC4D-HTM-AC24V
48V AC	HC1-HTM-AC48V-F	HC2-HTM-AC48V-F	HC3-HTM-AC48V-F	HC4-HTM-AC48V	HC4D-HTM-AC48V
100/110V AC	HC1-HTM-AC100V-F	HC2-HTM-AC100V-F	HC3-HTM-AC100V-F	HC4-HTM-AC100V	HC4D-HTM-AC100V
110/120V AC	HC1-HTM-AC120V-F	HC2-HTM-AC120V-F	HC3-HTM-AC120V-F	HC4-HTM-AC120V	HC4D-HTM-AC120V
200/220V AC	HC1-HTM-AC200V-F	HC2-HTM-AC200V-F	HC3-HTM-AC200V-F	HC4-HTM-AC200V	HC4D-HTM-AC200V
6V DC	HC1-HTM-DC6V-F	HC2-HTM-DC6V-F	HC3-HTM-DC6V-F	HC4-HTM-DC6V	HC4D-HTM-DC6V
12V DC	HC1-HTM-DC12V-F	HC2-HTM-DC12V-F	HC3-HTM-DC12V-F	HC4-HTM-DC12V	HC4D-HTM-DC12V
24V DC	HC1-HTM-DC24V-F	HC2-HTM-DC24V-F	HC3-HTM-DC24V-F	HC4-HTM-DC24V	HC4D-HTM-DC24V
48V DC	HC1-HTM-DC48V-F	HC2-HTM-DC48V-F	HC3-HTM-DC48V-F	HC4-HTM-DC48V	HC4D-HTM-DC48V
100/110V DC	HC1-HTM-DC100V-F	HC2-HTM-DC100V-F	HC3-HTM-DC100V-F	HC4-HTM-DC100V	HC4D-HTM-DC100V

Standard packing: Carton: 20 pcs.; Case: 200 pcs.

2. Amber sealed type

1) Plug-in type

Nominal coil voltage	1 Form C	2 Form C	4 Form C	4 Form C (twin)
	Part No.	Part No.	Part No.	Part No.
6V AC	HC1E-H-AC6V-F	HC2E-H-AC6V-F	HC4E-H-AC6V	HC4ED-H-AC6V
12V AC	HC1E-H-AC12V-F	HC2E-H-AC12V-F	HC4E-H-AC12V	HC4ED-H-AC12V
24V AC	HC1E-H-AC24V-F	HC2E-H-AC24V-F	HC4E-H-AC24V	HC4ED-H-AC24V
48V AC	HC1E-H-AC48V-F	HC2E-H-AC48V-F	HC4E-H-AC48V	HC4ED-H-AC48V
100/110V AC	HC1E-H-AC100V-F	HC2E-H-AC100V-F	HC4E-H-AC100V	HC4ED-H-AC100V
110/120V AC	HC1E-H-AC120V-F	HC2E-H-AC120V-F	HC4E-H-AC120V	HC4ED-H-AC120V
200/220V AC	HC1E-H-AC200V-F	HC2E-H-AC200V-F	HC4E-H-AC200V	HC4ED-H-AC200V
220/240V AC	HC1E-H-AC240V-F	HC2E-H-AC240V-F	HC4E-H-AC240V	HC4ED-H-AC240V
6V DC	HC1E-H-DC6V-F	HC2E-H-DC6V-F	HC4E-H-DC6V	HC4ED-H-DC6V
12V DC	HC1E-H-DC12V-F	HC2E-H-DC12V-F	HC4E-H-DC12V	HC4ED-H-DC12V
24V DC	HC1E-H-DC24V-F	HC2E-H-DC24V-F	HC4E-H-DC24V	HC4ED-H-DC24V
48V DC	HC1E-H-DC48V-F	HC2E-H-DC48V-F	HC4E-H-DC48V	HC4ED-H-DC48V
100/110V DC	HC1E-H-DC100V-F	HC2E-H-DC100V-F	HC4E-H-DC100V	HC4ED-H-DC100V

Standard packing: Carton: 20 pcs.; Case: 200 pcs.

2) Plug-in type (With LED indication)

Nominal coil voltage	1 Form C	2 Form C	4 Form C	4 Form C (twin)
	Part No.	Part No.	Part No.	Part No.
6V AC	HC1E-L-AC6V-F	HC2E-L-AC6V-F	HC4E-L-AC6V	HC4ED-L-AC6V
12V AC	HC1E-L-AC12V-F	HC2E-L-AC12V-F	HC4E-L-AC12V	HC4ED-L-AC12V
24V AC	HC1E-L-AC24V-F	HC2E-L-AC24V-F	HC4E-L-AC24V	HC4ED-L-AC24V
48V AC	HC1E-L-AC48V-F	HC2E-L-AC48V-F	HC4E-L-AC48V	HC4ED-L-AC48V
100/110V AC	HC1E-L-AC100V-F	HC2E-L-AC100V-F	HC4E-L-AC100V	HC4ED-L-AC100V
110/120V AC	HC1E-L-AC120V-F	HC2E-L-AC120V-F	HC4E-L-AC120V	HC4ED-L-AC120V
200/220V AC	HC1E-L-AC200V-F	HC2E-L-AC200V-F	HC4E-L-AC200V	HC4ED-L-AC200V
220/240V AC	HC1E-L-AC240V-F	HC2E-L-AC240V-F	HC4E-L-AC240V	HC4ED-L-AC240V
6V DC	HC1E-L-DC6V-F	HC2E-L-DC6V-F	HC4E-L-DC6V	HC4ED-L-DC6V
12V DC	HC1E-L-DC12V-F	HC2E-L-DC12V-F	HC4E-L-DC12V	HC4ED-L-DC12V
24V DC	HC1E-L-DC24V-F	HC2E-L-DC24V-F	HC4E-L-DC24V	HC4ED-L-DC24V
48V DC	HC1E-L-DC48V-F	HC2E-L-DC48V-F	HC4E-L-DC48V	HC4ED-L-DC48V
100/110V DC	HC1E-L-DC100V-F	HC2E-L-DC100V-F	HC4E-L-DC100V	HC4ED-L-DC100V

Standard packing: Carton: 20 pcs.; Case: 200 pcs.

3) PC board type

Nominal coil voltage	1 Form C	2 Form C	4 Form C	4 Form C (twin)
	Part No.	Part No.	Part No.	Part No.
6V AC	HC1E-HP-AC6V-F	HC2E-HP-AC6V-F	HC4E-HP-AC6V	HC4ED-HP-AC6V
12V AC	HC1E-HP-AC12V-F	HC2E-HP-AC12V-F	HC4E-HP-AC12V	HC4ED-HP-AC12V
24V AC	HC1E-HP-AC24V-F	HC2E-HP-AC24V-F	HC4E-HP-AC24V	HC4ED-HP-AC24V
48V AC	HC1E-HP-AC48V-F	HC2E-HP-AC48V-F	HC4E-HP-AC48V	HC4ED-HP-AC48V
100/110V AC	HC1E-HP-AC100V-F	HC2E-HP-AC100V-F	HC4E-HP-AC100V	HC4ED-HP-AC100V
110/120V AC	HC1E-HP-AC120V-F	HC2E-HP-AC120V-F	HC4E-HP-AC120V	HC4ED-HP-AC120V
200/220V AC	HC1E-HP-AC200V-F	HC2E-HP-AC200V-F	HC4E-HP-AC200V	HC4ED-HP-AC200V
220/240V AC	HC1E-HP-AC240V-F	HC2E-HP-AC240V-F	HC4E-HP-AC240V	HC4ED-HP-AC240V
6V DC	HC1E-HP-DC6V-F	HC2E-HP-DC6V-F	HC4E-HP-DC6V	HC4ED-HP-DC6V
12V DC	HC1E-HP-DC12V-F	HC2E-HP-DC12V-F	HC4E-HP-DC12V	HC4ED-HP-DC12V
24V DC	HC1E-HP-DC24V-F	HC2E-HP-DC24V-F	HC4E-HP-DC24V	HC4ED-HP-DC24V
48V DC	HC1E-HP-DC48V-F	HC2E-HP-DC48V-F	HC4E-HP-DC48V	HC4ED-HP-DC48V
100/110V DC	HC1E-HP-DC100V-F	HC2E-HP-DC100V-F	HC4E-HP-DC100V	HC4ED-HP-DC100V

Standard packing: Carton: 20 pcs.; Case: 200 pcs.
Note: Please add “-31” in the suffix of part number when ordering the PC board type 0.9 mm width terminal. (4 Form C, 4 Form C (twin) only)

4) PC board type (With LED indication)

Nominal coil voltage	1 Form C	2 Form C	4 Form C	4 Form C (twin)
	Part No.	Part No.	Part No.	Part No.
6V AC	HC1E-PL-AC6V-F	HC2E-PL-AC6V-F	HC4E-PL-AC6V	HC4ED-PL-AC6V
12V AC	HC1E-PL-AC12V-F	HC2E-PL-AC12V-F	HC4E-PL-AC12V	HC4ED-PL-AC12V
24V AC	HC1E-PL-AC24V-F	HC2E-PL-AC24V-F	HC4E-PL-AC24V	HC4ED-PL-AC24V
48V AC	HC1E-PL-AC48V-F	HC2E-PL-AC48V-F	HC4E-PL-AC48V	HC4ED-PL-AC48V
100/110V AC	HC1E-PL-AC100V-F	HC2E-PL-AC100V-F	HC4E-PL-AC100V	HC4ED-PL-AC100V
110/120V AC	HC1E-PL-AC120V-F	HC2E-PL-AC120V-F	HC4E-PL-AC120V	HC4ED-PL-AC120V
200/220V AC	HC1E-PL-AC200V-F	HC2E-PL-AC200V-F	HC4E-PL-AC200V	HC4ED-PL-AC200V
220/240V AC	HC1E-PL-AC240V-F	HC2E-PL-AC240V-F	HC4E-PL-AC240V	HC4ED-PL-AC240V
6V DC	HC1E-PL-DC6V-F	HC2E-PL-DC6V-F	HC4E-PL-DC6V	HC4ED-PL-DC6V
12V DC	HC1E-PL-DC12V-F	HC2E-PL-DC12V-F	HC4E-PL-DC12V	HC4ED-PL-DC12V
24V DC	HC1E-PL-DC24V-F	HC2E-PL-DC24V-F	HC4E-PL-DC24V	HC4ED-PL-DC24V
48V DC	HC1E-PL-DC48V-F	HC2E-PL-DC48V-F	HC4E-PL-DC48V	HC4ED-PL-DC48V
100/110V DC	HC1E-PL-DC100V-F	HC2E-PL-DC100V-F	HC4E-PL-DC100V	HC4ED-PL-DC100V

Standard packing: Carton: 20 pcs.; Case: 200 pcs.
Note: Please add “-31” in the suffix of part number when ordering the PC board type 0.9 mm width terminal. (4 Form C, 4 Form C (twin) only)

5) TM type

Nominal coil voltage	1 Form C	2 Form C	4 Form C	4 Form C (twin)
	Part No.	Part No.	Part No.	Part No.
6V AC	HC1E-HTM-AC6V-F	HC2E-HTM-AC6V-F	HC4E-HTM-AC6V	HC4ED-HTM-AC6V
12V AC	HC1E-HTM-AC12V-F	HC2E-HTM-AC12V-F	HC4E-HTM-AC12V	HC4ED-HTM-AC12V
24V AC	HC1E-HTM-AC24V-F	HC2E-HTM-AC24V-F	HC4E-HTM-AC24V	HC4ED-HTM-AC24V
48V AC	HC1E-HTM-AC48V-F	HC2E-HTM-AC48V-F	HC4E-HTM-AC48V	HC4ED-HTM-AC48V
100/110V AC	HC1E-HTM-AC100V-F	HC2E-HTM-AC100V-F	HC4E-HTM-AC100V	HC4ED-HTM-AC100V
110/120V AC	HC1E-HTM-AC120V-F	HC2E-HTM-AC120V-F	HC4E-HTM-AC120V	HC4ED-HTM-AC120V
200/220V AC	HC1E-HTM-AC200V-F	HC2E-HTM-AC200V-F	HC4E-HTM-AC200V	HC4ED-HTM-AC200V
220/240V AC	HC1E-HTM-AC240V-F	HC2E-HTM-AC240V-F	HC4E-HTM-AC240V	HC4ED-HTM-AC240V
6V DC	HC1E-HTM-DC6V-F	HC2E-HTM-DC6V-F	HC4E-HTM-DC6V	HC4ED-HTM-DC6V
12V DC	HC1E-HTM-DC12V-F	HC2E-HTM-DC12V-F	HC4E-HTM-DC12V	HC4ED-HTM-DC12V
24V DC	HC1E-HTM-DC24V-F	HC2E-HTM-DC24V-F	HC4E-HTM-DC24V	HC4ED-HTM-DC24V
48V DC	HC1E-HTM-DC48V-F	HC2E-HTM-DC48V-F	HC4E-HTM-DC48V	HC4ED-HTM-DC48V
100/110V DC	HC1E-HTM-DC100V-F	HC2E-HTM-DC100V-F	HC4E-HTM-DC100V	HC4ED-HTM-DC100V

Standard packing: Carton: 20 pcs.; Case: 200 pcs.

3. With diode type (For DC)

1) Plug-in type

Nominal coil voltage	1 Form C	2 Form C	3 Form C	4 Form C	4 Form C (twin)
	Part No.	Part No.	Part No.	Part No.	Part No.
6V DC	HC1-DC6V-D-F	HC2-DC6V-D-F	HC3-DC6V-D-F	HC4-DC6V-D	HC4D-DC6V-D
12V DC	HC1-DC12V-D-F	HC2-DC12V-D-F	HC3-DC12V-D-F	HC4-DC12V-D	HC4D-DC12V-D
24V DC	HC1-DC24V-D-F	HC2-DC24V-D-F	HC3-DC24V-D-F	HC4-DC24V-D	HC4D-DC24V-D
48V DC	HC1-DC48V-D-F	HC2-DC48V-D-F	HC3-DC48V-D-F	HC4-DC48V-D	HC4D-DC48V-D
100/110V DC	HC1-DC100V-D-F	HC2-DC100V-D-F	HC3-DC100V-D-F	HC4-DC100V-D	HC4D-DC100V-D

Standard packing: Carton: 20 pcs.; Case: 200 pcs.

2) Plug-in type (with LED indication)

Nominal coil voltage	1 Form C	2 Form C	3 Form C	4 Form C	4 Form C (twin)
	Part No.	Part No.	Part No.	Part No.	Part No.
6V DC	HC1-L-DC6V-D-F	HC2-L-DC6V-D-F	HC3-L-DC6V-D-F	HC4-L-DC6V-D	HC4D-L-DC6V-D
12V DC	HC1-L-DC12V-D-F	HC2-L-DC12V-D-F	HC3-L-DC12V-D-F	HC4-L-DC12V-D	HC4D-L-DC12V-D
24V DC	HC1-L-DC24V-D-F	HC2-L-DC24V-D-F	HC3-L-DC24V-D-F	HC4-L-DC24V-D	HC4D-L-DC24V-D
48V DC	HC1-L-DC48V-D-F	HC2-L-DC48V-D-F	HC3-L-DC48V-D-F	HC4-L-DC48V-D	HC4D-L-DC48V-D
100/110V DC	HC1-L-DC100V-D-F	HC2-L-DC100V-D-F	HC3-L-DC100V-D-F	HC4-L-DC100V-D	HC4D-L-DC100V-D

Standard packing: Carton: 20 pcs.; Case: 200 pcs.

4. ⓘ With CR circuit type

1) Plug-in type

Nominal coil voltage	1 Form C	2 Form C	3 Form C	4 Form C	4 Form C (twin)
	Part No.	Part No.	Part No.	Part No.	Part No.
100/110V AC	HC1-AC100V-R-F	HC2-AC100V-R-F	HC3-AC100V-R-F	HC4-AC100V-R	HC4D-AC100V-R
110/120V AC	HC1-AC120V-R-F	HC2-AC120V-R-F	HC3-AC120V-R-F	HC4-AC120V-R	HC4D-AC120V-R
200/220V AC	HC1-AC200V-R-F	HC2-AC200V-R-F	HC3-AC200V-R-F	HC4-AC200V-R	HC4D-AC200V-R
220/240V AC	HC1-AC240V-R-F	HC2-AC240V-R-F	HC3-AC240V-R-F	HC4-AC240V-R	HC4D-AC240V-R

Standard packing: Carton: 20 pcs.; Case: 200 pcs.

2) Plug-in type (with LED indication)

Nominal coil voltage	1 Form C	2 Form C	3 Form C	4 Form C	4 Form C (twin)
	Part No.	Part No.	Part No.	Part No.	Part No.
100/110V AC	HC1-L-AC100V-R-F	HC2-L-AC100V-R-F	HC3-L-AC100V-R-F	HC4-L-AC100V-R	HC4D-L-AC100V-R
110/120V AC	HC1-L-AC120V-R-F	HC2-L-AC120V-R-F	HC3-L-AC120V-R-F	HC4-L-AC120V-R	HC4D-L-AC120V-R
200/220V AC	HC1-L-AC200V-R-F	HC2-L-AC200V-R-F	HC3-L-AC200V-R-F	HC4-L-AC200V-R	HC4D-L-AC200V-R
220/240V AC	HC1-L-AC240V-R-F	HC2-L-AC240V-R-F	HC3-L-AC240V-R-F	HC4-L-AC240V-R	HC4D-L-AC240V-R

Standard packing: Carton: 20 pcs.; Case: 200 pcs.

* For sockets and terminal sockets, see page 206.

RATING

1. Standard type

1) Coil data

(1) AC coils (50/60Hz)

Type	Nominal coil voltage	Pick-up voltage (at 20°C 68°F)	Drop-out voltage (at 20°C 68°F)	Nominal coil current [±20%] (at 20°C 68°F)		Coil inductance		Nominal operating power		Max. applied voltage (at 70°C 158°F)
				50Hz	60Hz	N.C. condition	N.O. condition	50Hz	60Hz	
Standard	6V AC	80%V or less of nominal voltage (Initial)	30%V or more of nominal voltage (Initial)	224mA	200mA	0.078H	0.074H	1.3VA	1.2VA	110%V of nominal voltage
	12V AC			111mA	100mA	0.312H	0.295H			
	24V AC			56mA	50mA	1.243H	1.181H			
	48V AC			28mA	25mA	4.974H	4.145H			
	100/110V AC			13.4/14.7mA	12/13.2mA	23.75H	20.63H			
	110/120V AC			12.2/13.5mA	10.9/11.9mA	27.19H	25.57H			
	200/220V AC			6.7/7.4mA	6/6.6mA	85.98H	81.76H			

Notes: 1. The relay operates in a range of 80% to 110% V of the voltage rating, but ideally, in consideration of temporary voltage fluctuations, it should be operated at the rated voltage. In particular, for AC operation, if the applied voltage drops to 80% V or more below the rated voltage, humming will occur and a large current will flow leading possibly to coil burnout.
2. The maximum applied voltage is the maximum voltage fluctuation value for the coil power supply. This value is not a permissible value for continuous operation. (This value differs depending on the ambient temperature. Please contact us for details.)

(2) DC coils

Type	Nominal coil voltage	Pick-up voltage (at 20°C 68°F)	Drop-out voltage (at 20°C 68°F)	Nominal coil current [±10%] (at 20°C 68°F)	Coil resistance [±10%] (at 20°C 68°F)	Nominal operating power	Max. applied voltage (at 70°C 158°F)
Standard	6V DC	80%V or less of nominal voltage (Initial)	10%V or more of nominal voltage (Initial)	150mA	40Ω	0.9W	110%V of nominal voltage
	12V DC			75mA	160Ω		
	24V DC			37mA	650Ω		
	48V DC			18.5mA	2,600Ω		
	100/110V DC			10/11mA	10,000Ω	1.0W	

Notes: 1. The coil resistance for DC operation is the value measured when the coil temperature is 20°C 68°F. Compensate ±0.4% for every ±1°C change in temperature.
2. The relay operates in a range of 80% to 110% V of the voltage rating, but ideally, in consideration of temporary voltage fluctuations, it should be operated at the rated voltage.
3. For use with 200 V DC, connect a 10 KΩ (5W) resistor, in series, to the 100 V DC relay.
4. The maximum applied voltage is the maximum voltage fluctuation value for the coil power supply. This value is not a permissible value for continuous operation. (This value differs depending on the ambient temperature. Please contact us for details.)

2) Specifications

Characteristics	Item		Specifications				
Contact	Arrangement		1 Form C	2 Form C	3 Form C	4 Form C	4 Form C (twin)
	Contact resistance (Initial)		Max. 30 mΩ (By voltage drop 6 V DC 1A)				
	Contact material		Ag alloy (cd free) + Au flash			AgNi type + Au clad	
Rating	Nominal switching capacity (resistive load)		10A 250V AC	7A 250V AC	7A 250V AC	5A 250V AC	3A 250V AC
	Max. switching power (resistive load)		2,500VA	1,750VA	1,750VA	1,250VA	750VA
	Max. switching voltage		250VAC				
	Max. switching current		10A	7A	7A	5A	3A
	Nominal operating power		AC (50Hz): 1.3VA, AC (60Hz): 1.2VA, DC: 0.9 to 1.1W				
	Min. switching capacity (Reference value)*1		1mA 1V DC				100μA 1V DC
Electrical characteristics	Insulation resistance (Initial)		Min. 1,000MΩ (at 500V DC) Measurement at same location as “Breakdown voltage” section.				
	Breakdown voltage (Initial)	Between open contacts	700 Vrms for 1min. (Detection current: 10mA.)				
		Between contact sets	700 Vrms for 1min. (Detection current: 10mA.)				
		Between contact and coil	2,000 Vrms for 1min. (Detection current: 10mA.)				
	Temperature rise (coil) (at 70°C 158°F)		Max. 80°C 176°F (By resistive method, nominal coil voltage)				
	Operate time (at 20°C 68°F)*2		Max. 20ms (Nominal coil voltage applied to the coil, excluding contact bounce time.)				
	Release time (at 20°C 68°F)*2		Max. 20ms (Nominal coil voltage applied to the coil, excluding contact bounce time.) (without diode)				
Mechanical characteristics	Shock resistance	Functional	Min. 196 m/s² (Half-wave pulse of sine wave: 11 ms; detection time: 10μs.)				
		Destructive	Min. 980 m/s² (Half-wave pulse of sine wave: 6 ms.)				
	Vibration resistance	Functional	10 to 55 Hz at double amplitude of 1 mm (Detection time: 10μs.)				
		Destructive	10 to 55 Hz at double amplitude of 2 mm				
Expected life	Mechanical		Min. 5×10^7: AC coil type (at 180 times/min.); Min. 10^8: DC coil type (at 180 times/min.)				
	Electrical		Min. 2×10^5 resistive load (at 20 times/min.)	Min. 2×10^5 resistive load (at 20 times/min.)	Min. 10^5 resistive load (at 20 times/min.)	Min. 2×10^5 resistive load (at 20 times/min.)	Min. 2×10^5 resistive load (at 20 times/min.)
Conditions	Conditions for operation, transport and storage*3		Ambient temperature: –50°C to +70°C –58°F to +158°F (without LED); –50°C to +60°C –58°F to +140°F (with LED) Humidity: 5 to 85% R.H. (Not freezing and condensing at low temperature)				
	Max. Operating speed		20 times/min. (at max. rating)				
Unit weight			Approx. 30g 1.06 oz				

Notes:
*1. This value can change due to the switching frequency, environmental conditions and desired reliability level, therefore it is recommended to check this with the actual load.
*2. For the AC coil types, the operate/release time will differ depending on the phase.
*3.The upper limit of the ambient temperature is the maximum temperature that can satisfy the coil temperature rise value. Refer to “6. Usage, Storage and Transport Conditions“ in AMBIENT ENVIRONMENT section in Relay Technical Information.

3) Switching capacity and expected life

(1) Electrical (at 20 times/min.)

Load	AC				DC		Expected life
	Resistive (cos φ = 1)		Inductive (cos φ ≒ 0.4)		Resistive	Inductive	
Voltage	125V AC	250V AC	125V AC	250V AC	30V DC	30V DC	
1 Form C	10A	10A	5A	3A	—	—	Min. 2×10^5
	7A	7A	3A	2.5A	3A	1A	Min. 5×10^5
	5A	5A	2A	1.5A	—	—	Min. 10^6
2 Form C	7A	7A	3.5A	2A	—	—	Min. 2×10^5
	5A	5A	2.5A	1.5A	3A	0.6A	Min. 5×10^5
	3A	3A	1.5A	1A	—	—	Min. 10^6
3 Form C	7A	7A	—	—	—	—	Min. 10^5
	—	—	3.5A	2A	—	—	Min. 2×10^5
	5A	5A	—	—	3A	0.4A	Min. 5×10^5
4 Form C	5A	5A	2A	1A	—	—	Min. 2×10^5
	3A	3A	1A	0.8A	3A	0.4A	Min. 5×10^5
	2A	2A	0.5A	0.4A	—	—	Min. 10^6
4 Form C (twin)	3A	3A	1A	0.8A	3A	—	Min. 2×10^5

(2) Mechanical (at 180 times/min.)

AC coil type: Min. 5×10^7; DC coil type: Min. 10^8

2. Amber sealed type

1) Coil data

Same coil data as HC relay standard type. Please refer to standard type information.

2) Specifications

Characteristics	Item	Specifications			
		1 Form C	2 Form C	4 Form C	4 Form C (twin)
Contact	Arrangement	1 Form C	2 Form C	4 Form C	4 Form C
Rating	Nominal switching capacity (resistive load)	5A 250V AC	3A 250V AC	2A 250V AC	1A 250V AC
	Max. switching power (resistive load)	1,250VA	700VA	500VA	250VA
	Max. switching voltage	250VAC	250VAC	250VAC	250VAC
	Max. switching current	5A	3A	2A	1A
	Min. switching capacity (Reference value)*1	1mA 100mV DC			100μA 100mV DC
Electrical characteristics	Temperature rise (coil) (at 60°C 140°F)	Max. 90°C 194°F (By resistive method, nominal voltage)			
Expected life	Electrical	Min. 2×10^5 resistive load (at 20 times/min.)			
Conditions	Conditions for operation, transport and storage*2	Ambient temperature: –40°C to +60°C –40°F to +140°F; Humidity: 5 to 85% R.H. (Not freezing and condensing at low temperature)			
	Ambient air pressure	760mmHg±20% (1,013mb±20%)			

Notes: Other specifications are same as standard types.

*1. This value can change due to the switching frequency, environmental conditions and desired reliability level, therefore it is recommended to check this with the actual load.

*2.The upper limit of the ambient temperature is the maximum temperature that can satisfy the coil temperature rise value. Refer to "6. Usage, Storage and Transport Conditions" in AMBIENT ENVIRONMENT section in Relay Technical Information.

3) Switching capacity and expected life

(1) Electrical (at 20 times/min.)

Load	AC				DC		Expected life
	Resistive (cos φ = 1)		Inductive (cos φ ≒ 0.4)		Resistive	Inductive	
Voltage	125V AC	250V AC	125V AC	250V AC	30V DC	30V DC	
HC1E	5A	5A	—	—	3A	1A	Min. 2×10^5
HC2E	3A	3A	—	—	2A	0.7A	Min. 2×10^5
HC4E	2A	2A	—	—	2A	0.6A	Min. 2×10^5
HC4ED (4 Form C twin)	1A	1A	—	—	—	—	Min. 2×10^5

(2) Mechanical (at 180 times/min.)

AC coil type: Min. 5×10^7; DC coil type: Min. 10^8

3. With diode type (For DC)

1) Coil data

Same coil data as HC relay standard type for DC. Please refer to standard type information.

Please connect DC coil type built-in diode correctly by verifying the coil polarity.

2) Specifications

Characteristics	Item	Specifications
Conditions	Conditions for operation, transport and storage*	Ambient temperature: –50°C to +60°C –58°F to +140°F Humidity: 5 to 85% R.H. (Not freezing and condensing at low temperature)

Notes: Other specifications are same as standard type HC relay. Please see the standard type HC relay.

*The upper limit of the ambient temperature is the maximum temperature that can satisfy the coil temperature rise value. Refer to "6. Usage, Storage and Transport Conditions" in AMBIENT ENVIRONMENT section in Relay Technical Information.

4. ⓘ With CR circuit type

1) Coil data

Same coil data as HC relay standard type for AC. Please refer to standard type information.

2) Specifications

Characteristics	Item	Specifications
Electrical characteristics	Temperature rise (coil)	Max. 90°C 194°F (By resistive method, nominal voltage, rated current at 60°C 140°F)
Conditions	Conditions for operation, transport and storage*	Ambient temperature: –50°C to +60°C –58°F to +140°F Humidity: 5 to 85% R.H. (Not freezing and condensing at low temperature)

Notes: Other specifications are same as standard type HC relay. Please see the standard type HC relay.

*The upper limit of the ambient temperature is the maximum temperature that can satisfy the coil temperature rise value. Refer to "6. Usage, Storage and Transport Conditions" in AMBIENT ENVIRONMENT section in Relay Technical Information.

REFERENCE DATA

Standard type

1. Life curve

Load: 250 V AC resistive load

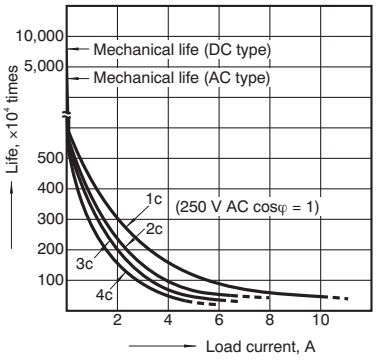

2.-(1) Switching capacity range
(single contact type)

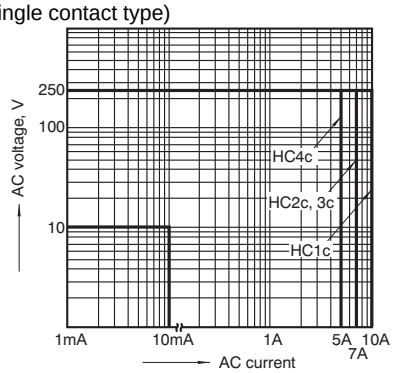

2.-(2) Switching capacity range
(4-pole bifurcated (twin) contact type)

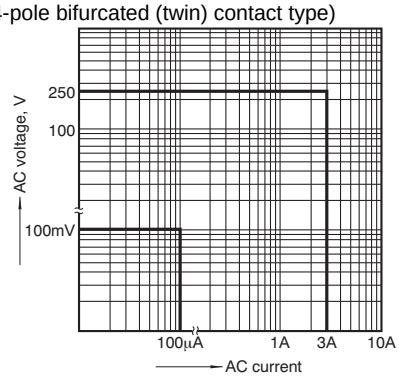

3.-(1) Coil temperature rise
(1 Form C, AC type)

Measured portion: Inside the coil
Ambient temperature: 25°C 77°F (See note.)

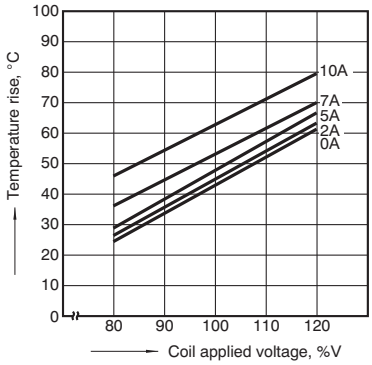

3.-(2) Coil temperature rise
(2 Form C, AC type)

Measured portion: Inside the coil
Ambient temperature: 30°C 86°F (See note.)

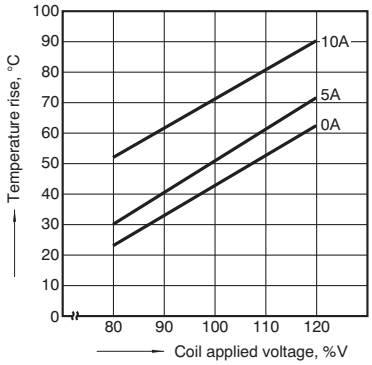

3.-(3) Coil temperature rise
(3 Form C, AC type)

Measured portion: Inside the coil
Ambient temperature: 18°C 64°F (See note.)

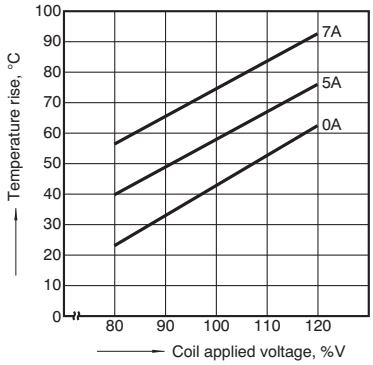

3.-(4) Coil temperature rise
(4 Form C, AC type)

Measured portion: Inside the coil
Ambient temperature: 15 to 21°C 59 to 70°F (See note.)

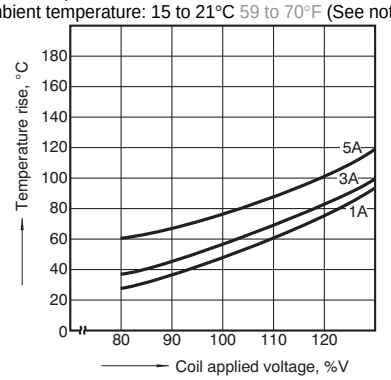

3.-(5) Coil temperature rise
(1 Form C, DC type)

Measured portion: Inside the coil
Ambient temperature: 29°C 84°F

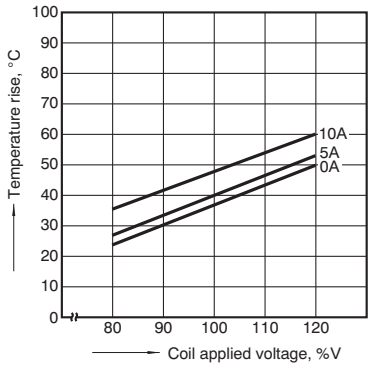

3.-(6) Coil temperature rise
(2 Form C, DC type)

Measured portion: Inside the coil
Ambient temperature: 29°C 84°F

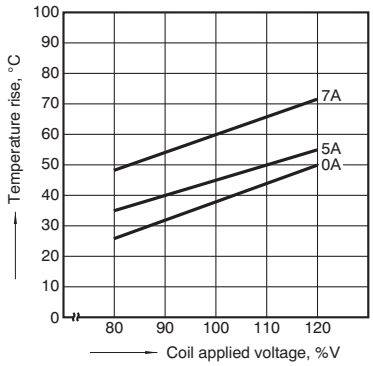

3.-(7) Coil temperature rise
(3 Form C, DC type)

Measured portion: Inside the coil
Ambient temperature: 29°C 84°F

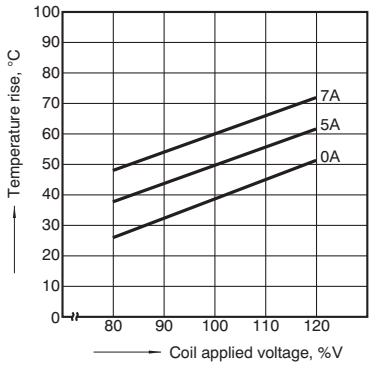

3.-(8) Coil temperature rise
(4 Form C, DC type)

Measured portion: Inside the coil
Ambient temperature: 17 to 18°C 62 to 64°F

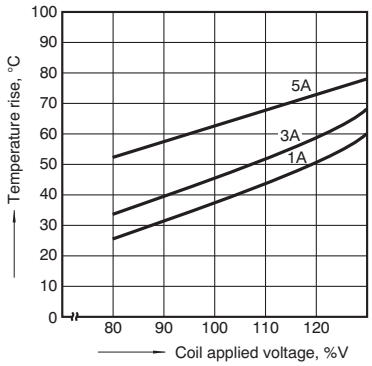

Note: Coil temperature rise

When the nominal voltage is applied to AC 120 or 240 V coil types respectively, the figures of coil temperature rise increase by approx. 10 degrees to the ones shown on each graph.

Amber sealed type

1.-(1) Switching capacity range
(single contact type)

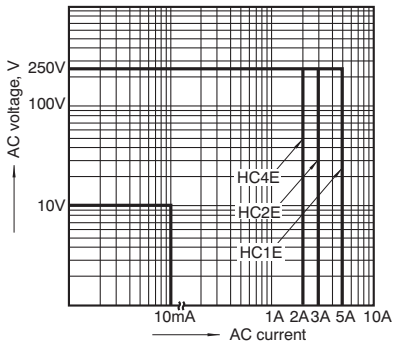

1.-(2) Switching capacity range
(4-pole bifurcated (twin) contact type)

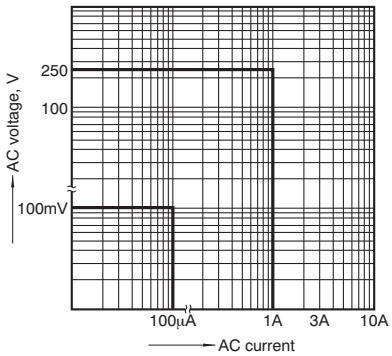

2.-(1) Coil temperature rise (1 Form C AC type)
Measured portion: Inside the coil
Ambient temperature: 30°C 86°F

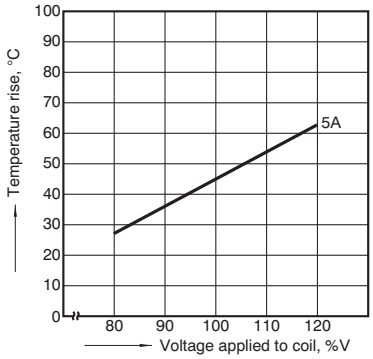

2.-(2) Coil temperature rise (2 Form C AC type)
Measured portion: Inside the coil
Ambient temperature: 30°C 86°F (See note.)

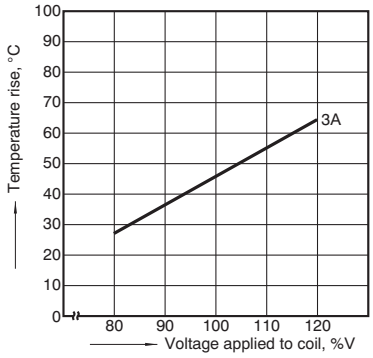

2.-(3) Coil temperature rise (4 Form C AC type)
Measured portion: Inside the coil
Ambient temperature: 30°C 86°F (See note.)

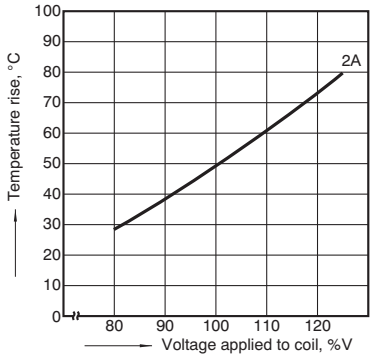

2.-(4) Coil temperature rise (1 Form C DC type)
Measured portion: Inside the coil
Ambient temperature: 30°C 86°F

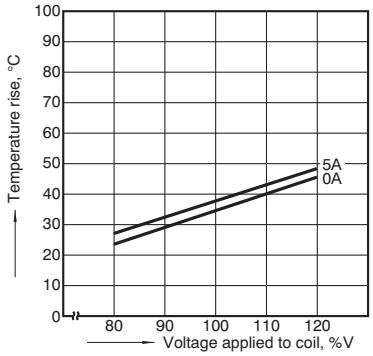

2.-(5) Coil temperature rise (2 Form C DC type)
Measured portion: Inside the coil
Ambient temperature: 30°C 86°F

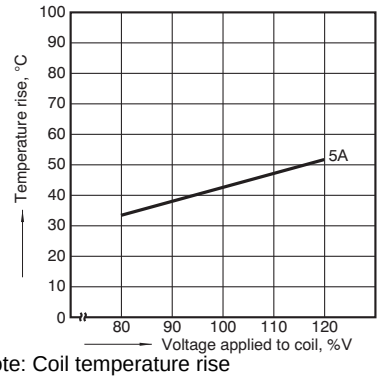

Note: Coil temperature rise

When the nominal voltage is applied to AC 120 or 240 V coil types respectively, the figures of coil temperature rise increase by approx. 10 degrees to the ones shown on each graph.

With diode type (For DC)

1.-(1) DC coil surge voltage waveform
(without diode)

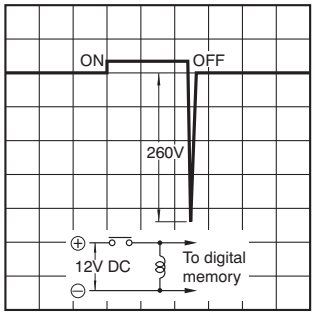

1.-(2) DC coil surge voltage waveform
(with diode)
Diode characteristics;
Reverse breakdown voltage: 1,000V,
Forward current: 1A

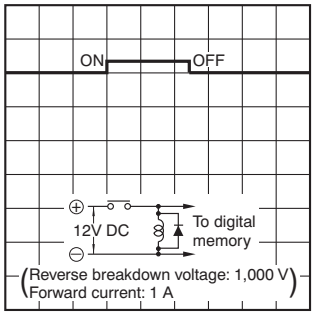

ⓘ With CR circuit type

1.-(1) AC coil surge voltage waveform (with CR circuit)
Tested sample: HC4-AC200V-R

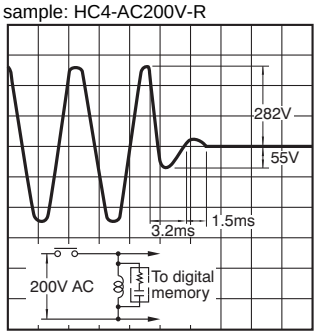

1.-(2) AC coil surge voltage waveform (without CR circuit)
Tested sample: HC4-AC200V

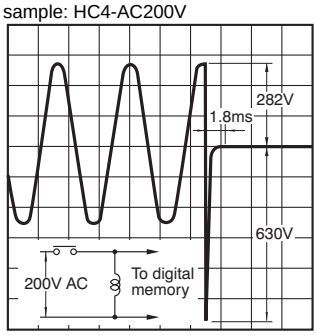

DIMENSIONS (mm inch)

Download CAD Data from our Web site.

Standard and Amber sealed types

1) Plug-in type

1 Form C

CAD Data

External dimensions

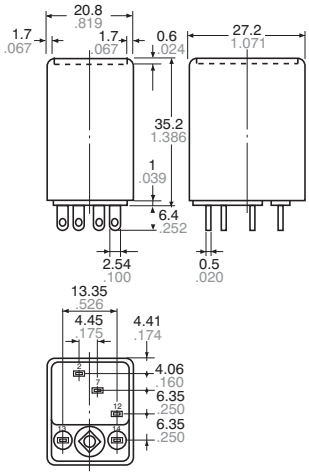

Schematic (Bottom view)

Standard type

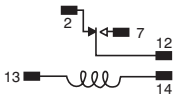

LED AC type

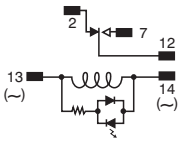

LED DC type

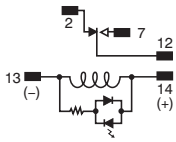

General tolerance: ±0.3 ±.012

2 Form C

CAD Data

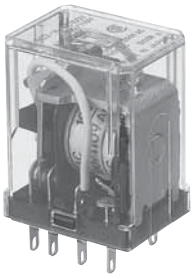

External dimensions

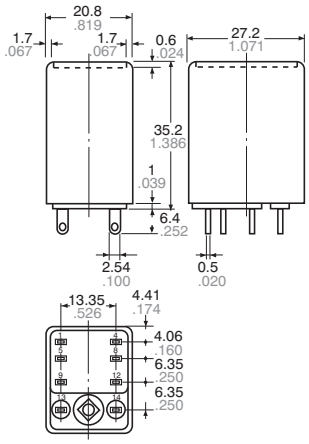

Schematic (Bottom view)

Standard type

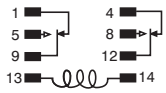

LED AC type

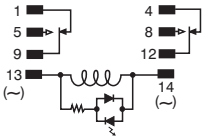

LED DC type

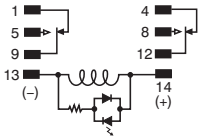

General tolerance: ±0.3 ±.012

3 Form C

CAD Data

External dimensions

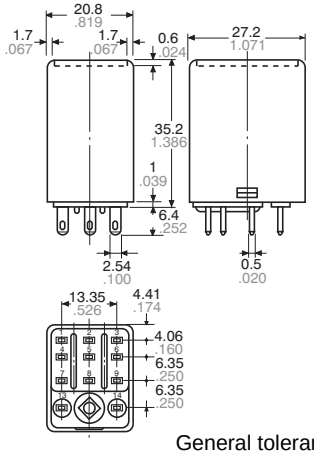

General tolerance: ±0.3 ±.012

Schematic (Bottom view)

Standard type

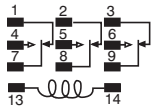

LED AC type

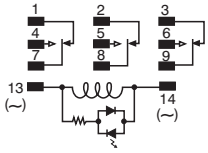

LED DC type

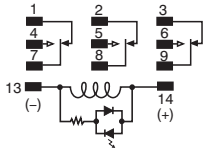

4 Form C and 4-pole bifurcated (twin)

CAD Data

External dimensions

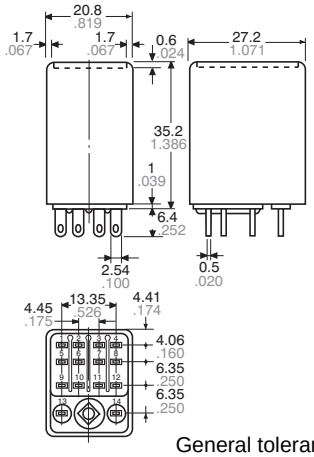

General tolerance: ±0.3 ±.012

Schematic (Bottom view)

Standard type

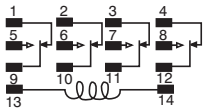

LED AC type

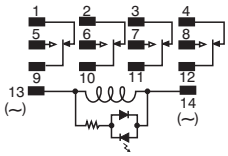

LED DC type

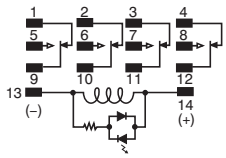

2) PC board type

4 Form C

CAD Data

External dimensions

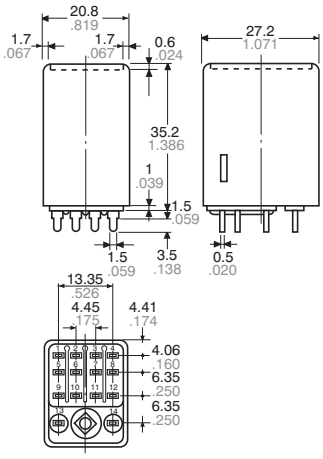

The diagrams show the external dimensions of the 4 Form C and 4-pole bifurcated (twin) types. For 1 Form C, 2 Form C, and 3 Form C, see diagrams at plug-in types (only the terminals are different).
Types with 0.9 mm terminal width are also available.

General tolerance: ±0.3 ±.012

PC board pattern

1 Form C

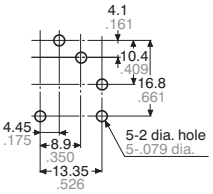

2 Form C

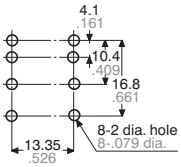

3 Form C

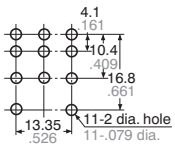

4 Form C

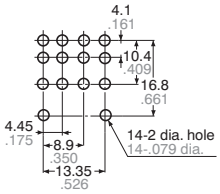

Tolerance: ±0.1 ±.004

Schematic

Same schematic as plug-in type HC relay

3) TM type

4 Form C

CAD Data

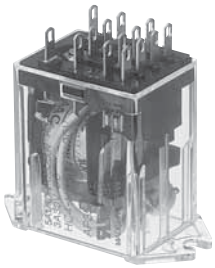

External dimensions

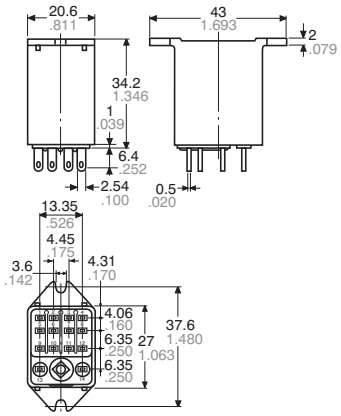

The diagrams show the external dimensions of the 4 Form C and 4-pole bifurcated (twin) types. For 1 Form C, 2 Form C, and 3 Form C, see diagrams at plug-in types (only the terminals are different).

General tolerance: ±0.3 ±.012

Chassis (Panel) cutout

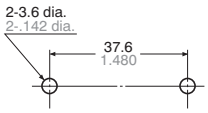

Tolerance: ±0.1 ±.004

Chassis (Panel) cutout in tandem mounting

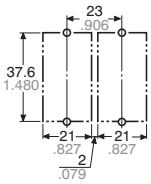

Schematic

Same schematic as plug-in type HC relay

Be aware that there is no LED indicator with CR circuit and built-in diode types.

Notes: 1. In mounting, use M3 screws and M3 washers.
2. When mounting TM types, use washers to prevent damage or distortion to the polycarbonate cover.
3. When tightening fixing screws, the optimum torque range should be 0.294 to 0.49 N·m, (3 to 5 kgf·cm). Moreover, use washers to prevent loosening.

With diode type (For DC)

Same dimensions as HC relay standard/plug-in type

CAD Data

Schematic

Without LED indicator

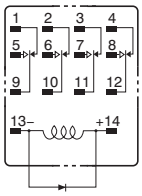

Protection (surge-absorbing) diode

With LED indicator

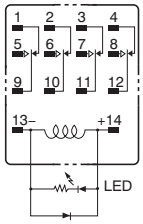

Protection (surge-absorbing) diode

ⓘ **With CR circuit type**

Plug-in type

CAD Data

4 Form C External dimensions

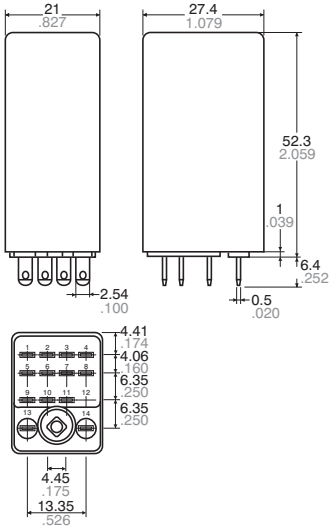

Schematic

Without LED indicator

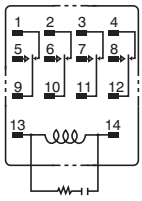

With LED indicator

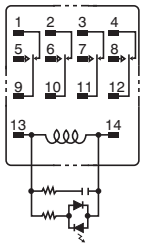

Diagrams show the external dimensions and schematic of the 4 Form C and 4-pole bifurcated (twin) types. For the 1 Form C, 2 Form C, and 3 Form C types, only the terminals differ. The dimensions of the terminal are the same as for standard type HC relays.

General tolerance: ±0.3 ±.012

SAFETY STANDARDS

Item		UL/C-UL (Recognized)		CSA (Certified)		VDE (Certified)		TV rating (UL/CSA)		Remarks
		File No.	Contact rating	File No.	Contact rating	File No.	Contact rating	File No.	Rating	
HC Standard	1 Form C	E43028	10A 250V AC 1/3HP 125, 250V AC 3A 30V DC	LR26550 etc.	10A 250V AC 1/3HP 125, 250V AC 3A 30V DC	40017406	10A 250V AC (cosφ=1.0) 3A 250V AC (cosφ=0.4) 3A 30V DC (0ms)	UL E43149 CSA LR26550	TV-3	
	2 Form C	E43028	7A 250V AC 1/6HP 125, 250V AC 3A 30V DC	LR26550 etc.	7A 250V AC 1/6HP 125, 250V AC 3A 30V DC	40017406	7A 250V AC (cosφ=1.0) 2A 250V AC (cosφ=0.4) 3A 30V DC (0ms)	UL E43149 CSA LR26550	TV-3	
	3 Form C	E43028	7A 250V AC 1/6HP 125, 250V AC 3A 30V DC	LR26550 etc.	7A 250V AC 1/6HP 125, 250V AC 3A 30V DC	—	—	—	—	
	4 Form C	E43028	5A 250V AC 1/10HP 125, 250V AC 3A 30V DC	LR26550 etc.	5A 250V AC 1/10HP 125, 250V AC 3A 30V DC	40017406	5A 65V AC (cosφ=1.0) 3A 65V AC (cosφ=0.4) 3A 30V DC (0ms)	—	—	
	4 Form C twin	E43149	3A 250V AC 3A 30V DC	LR26550 etc.	3A 250V AC 3A 30V DC	—	—	—	—	
HC Amber	1 Form C	E43028	6A 250V AC 1/6HP 125, 250V AC 3A 30V DC	LR26550 etc.	6A 250V AC 1/6HP 125, 250V AC 3A 30V DC	—	—	—	—	
	2 Form C	E43028	4A 250V AC 1/10HP 125, 250V AC 3A 30V DC	LR26550 etc.	4A 250V AC 1/10HP 125, 250V AC 3A 30V DC	—	—	—	—	
	4 Form C	E43028	2A 250V AC 1/20HP 125, 250V AC 2A 30V DC	LR26550 etc.	2A 250V AC 1/20HP 125, 250V AC 2A 30V DC	—	—	—	—	
	4 Form C twin	E43149	1A 250V AC 1A 30V DC	LR26550 etc.	1A 250V AC 1A 30V DC	—	—	—	—	
HC with diode type (For DC)	1 Form C	E43028	10A 250V AC 1/3HP 125, 250V AC 3A 30V DC	LR26550 etc.	10A 250V AC 1/3HP 125, 250V AC 3A 30V DC	—	—	—	—	
	2 Form C	E43028	7A 250V AC 1/6HP 125, 250V AC 3A 30V DC	LR26550 etc.	7A 250V AC 1/6HP 125, 250V AC 3A 30V DC	—	—	—	—	
	3 Form C	E43028	7A 250V AC 1/6HP 125, 250V AC 3A 30V DC	LR26550 etc.	7A 250V AC 1/6HP 125, 250V AC 3A 30V DC	—	—	—	—	
	4 Form C	E43028	5A 250V AC 1/10HP 125, 250V AC 3A 30V DC	LR26550 etc.	5A 250V AC 1/10HP 125, 250V AC 3A 30V DC	—	—	—	—	
	4 Form C twin	E43149	3A 250V AC 3A 30V DC	LR26550 etc.	3A 250V AC 3A 30V DC	—	—	—	—	
ⓘ HC with CR circuit	1 Form C	E43028	10A 250V AC 1/3HP 125, 250V AC 3A 30V DC	LR26550 etc.	10A 250V AC 1/3HP 125, 250V AC 3A 30V DC	—	—	—	—	
	2 Form C	E43028	7A 250V AC 1/6HP 125, 250V AC 3A 30V DC	LR26550 etc.	7A 250V AC 1/6HP 125, 250V AC 3A 30V DC	—	—	—	—	
	3 Form C	E43028	7A 250V AC 1/6HP 125, 250V AC 3A 30V DC	LR26550 etc.	7A 250V AC 1/6HP 125, 250V AC 3A 30V DC	—	—	—	—	
	4 Form C	E43028	5A 250V AC 1/10HP 125, 250V AC 3A 30V DC	LR26550 etc.	5A 250V AC 1/10HP 125, 250V AC 3A 30V DC	—	—	—	—	
	4 Form C twin	E43149	3A 250V AC 3A 30V DC	LR26550 etc.	3A 250V AC 3A 30V DC	—	—	—	—	

NOTES

1. Amber sealed type
When mounting TM types, use washers to prevent damage or distortion to the polycarbonate cover. When tightening fixing screws, the optimum torque range should be 0.294 to 0.49 N·m, (3 to 5 kgf·cm). If screws are over tightened, the cover may distort, resulting in poor sealing. Moreover, to prevent loosening, use washers.

2. Diode characteristics
1) Reverse breakdown voltage: 1,000 V
2) Forward current: 1 A

3. Diode and ⓘ CR built-in type
Since the diode and CR inside the relay coil are designed to absorb the counter emf, the element may be damaged if a large surge, etc., is applied to the diode and CR.
If there is the possibility of a large surge voltage from the outside, please implement measures to absorb it.

4. Please connect DC coil types with LED and built-in diode correctly by verifying the coil polarity ("+" and "–"). Connecting with reverse polarity will cause the LED not to light and damage the built-in diode due to its specification.

For Cautions for Use, see Relay Technical Information.

Panasonic
ideas for life

ACCESSORIES

HC RELAYS
(Sockets and Terminal sockets)

FEATURES

1. HC Relay Sockets

In the table below, the socket suitable for each type of HC relay is indicated by a black dot.

1) Plug-in type sockets, PC board type sockets, and wrapping type sockets are available for HC relays.
2) Certified by UL and CSA
3) A hold-down clip is included in the package.

The fixing method is the same as for HC sockets, ordinary HC terminal sockets and HL sockets.

HC/HL-LEAF-SPRING-MK

Note: Not compatible with HJ relays.
Please use the HJ relay dedicated socket.

2. HC Relay Terminal sockets

In the table below, the terminal socket suitable for each type of HC relay is indicated by a black dot.

1) Ordinary terminal sockets and terminal sockets for DIN rail assembly are available.
2) Certified by UL/C-UL
3) A hold-down clip is included in the package.

The fixing method is the same as for sockets.

Ordinary terminal socket
HC/HL-LEAF-SPRING-MK

The fixing method is the same as for the HC DIN rail terminal sockets and the HL DIN rail terminal sockets.

DIN rail Terminal sockets
HC/HL-LEAF-SPRING-K

Note: Not compatible with HJ relays.
Please use the HJ relay dedicated terminal socket.

SELECTOR CHART

1. Sockets

Type	No. of pole	Product name	Part No.	Applicable HC relay (Plug-in type)								
				Standard type/With diode type (for DC)					Amber type			
				1 Form C	2 Form C	3 Form C	4 Form C	4 Form C (twin)	1 Form C	2 Form C	4 Form C	4 Form C (twin)
Plug-in	1-pole	HC1-socket	HC1-SS-K	•					•			
	2-pole	HC2-socket	HC2-SS-K		•					•		
	3-pole	HC3-socket	HC3-SS-K		•	•				•		
	1/2/4-pole (common)	HC4-socket	HC4-SS-K	•	•		•	•	•	•	•	•
PC board	1-pole	HC1-socket for PC board	HC1-PS-K	•					•			
	2-pole	HC2-socket for PC board	HC2-PS-K		•					•		
	3-pole	HC3-socket for PC board	HC3-PS-K		•	•				•		
	1/2/4-pole (common)	HC4-socket for PC board	HC4-PS-K	•	•		•	•	•	•	•	•
Wrapping	1/2/4-pole (common)	HC4-wrapping socket	HC4-WS-K	•	•		•	•	•	•	•	•
		HC4-wrapping socket (spring)	HC4-WS	•	•		•	•	•	•	•	•

Standard packing: Carton: 20 pcs.; Case: 200 pcs.
Notes: 1. Use the hold-down clip that is shipped with the socket. (The hold-down clip for HC relay with CR circuit is included in the package.)
2. Certified by UL and CSA (except for wrapping socket).
3. Not compatible with HJ relays.

2. Terminal sockets (ⓘ Sockets marked are discontinued as of March 31, 2013.)

Type	No. of pole	Item	Part No.	Standard packing		Applicable HC relay (Plug-in type)								
						Standard type/With diode type (for DC)					Amber type			
				Carton	Case	1 Form C	2 Form C	3 Form C	4 Form C	4 Form C (twin)	1 Form C	2 Form C	4 Form C	4 Form C (twin)
For DIN rail	2-pole	HC2-slim type DIN terminal socket	HC2-SFD-S	20 pcs.	100 pcs.		•					•		
	2-pole	ⓘ HC2-DIN	HC2-SFD-K	10 pcs.	100 pcs.		•					•		
	3-pole	HC3-DIN	HC3-SFD-K	5 pcs.	50 pcs.		•	•				•		
	1/2/4-pole (common)	ⓘ HC4-DIN high terminal socket	HC4-SFD-K	10 pcs.	100 pcs.	•	•		•	•	•	•	•	•
	1/2/4-pole (common)	HC vertical terminal socket	HC4-TSF-K	20 pcs.	200 pcs.	•	•		•	•	•	•	•	•
For general	2-pole	HC2-terminal socket	HC2-SF-K	10 pcs.	100 pcs.		•					•		
	3-pole	HC3-high terminal socket	HC3-HSF-K	5 pcs.	50 pcs.		•	•				•		
	1/2/4-pole (common)	HC-high terminal socket	HC4-HSF-K	5 pcs.	50 pcs.	•	•		•	•	•	•	•	•

Notes: 1. Use the hold-down clip that is shipped with the socket. (The hold-down clip for HC relay with CR circuit is included in the package.)
2. Certified by UL/C-UL (except for HC4-TSF-K).
3. In order to prevent breakage and disfiguring, the screw tightening torque for the terminal socket should be within the range of 0.49 to 0.69 N·m {5 to 7kgf·cm}.
4. Not compatible with HJ relays.

DIMENSIONS (mm inch)

1. Plug-in type sockets

HC1-Socket (HC1-SS-K)

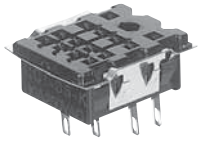

External dimensions

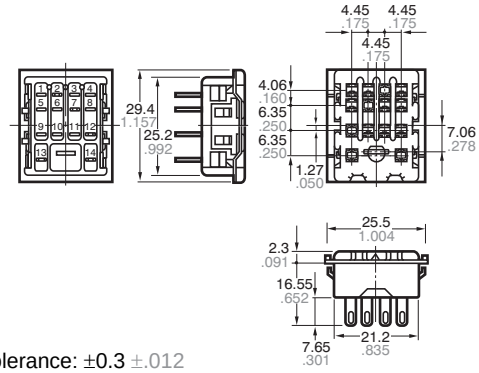

General tolerance: ±0.3 ±.012

HC2-Socket (HC2-SS-K)

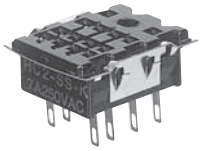

External dimensions

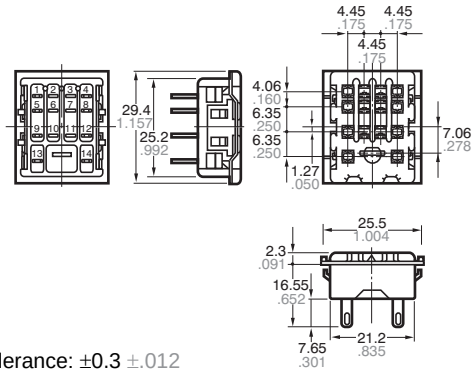

General tolerance: ±0.3 ±.012

HC3-Socket (HC3-SS-K)

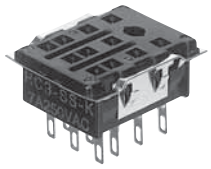

External dimensions

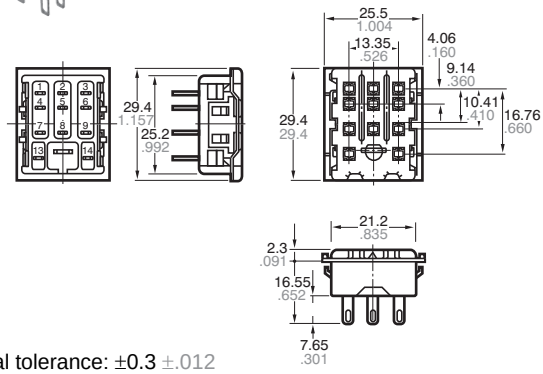

General tolerance: ±0.3 ±.012

HC4-Socket (HC4-SS-K)

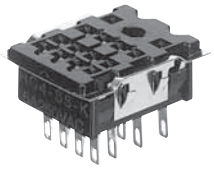

External dimensions

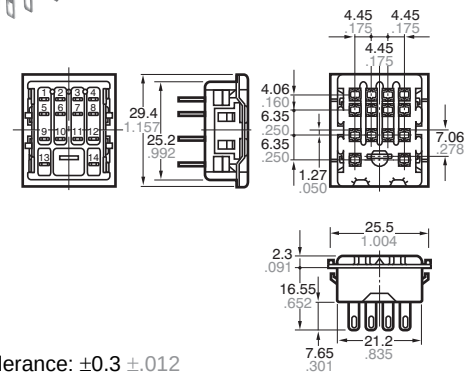

General tolerance: ±0.3 ±.012

Mounting hole diagram

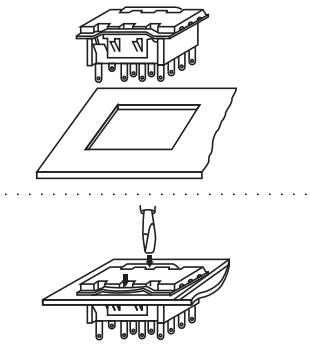

Side-by-side installation

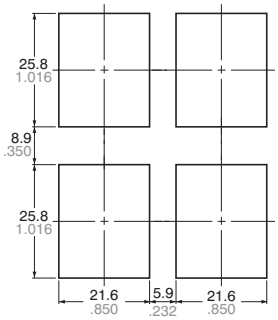

General tolerance: ±0.2 ±.008

With a relay mounted (HC2-SS-K)

Hold-down clip is packaged with the socket.

Notes: 1. Applicable chassis board thickness is 1.0 to 2.0 mm.
2. Installation is easy by inserting the socket from the top into the holes and by depressing the two down arrows on the retention fitting from the front.

2. PC board type sockets

HC1- PC board type socket (HC1-PS-K)

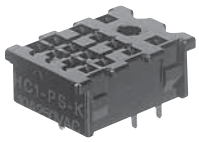

External dimensions

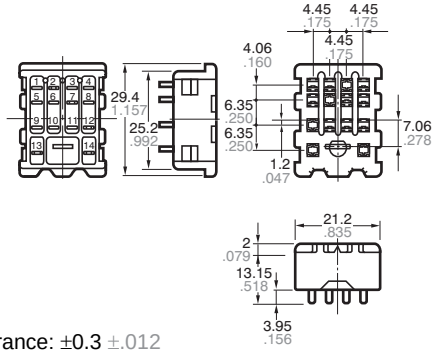

General tolerance: ±0.3 ±.012

HC2- PC board type socket (HC2-PS-K)

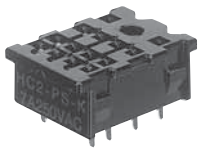

External dimensions

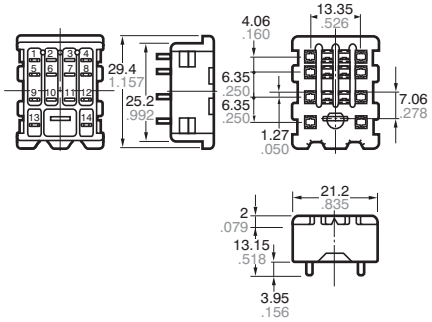

General tolerance: ±0.3 ±.012

HC3- PC board type socket (HC3-PS-K)

External dimensions

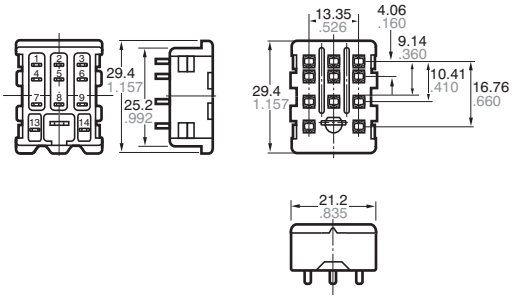

General tolerance: ±0.3 ±.012

HC4- PC board type socket (HC4-PS-K)

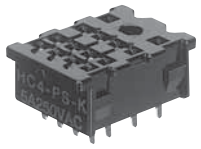

External dimensions

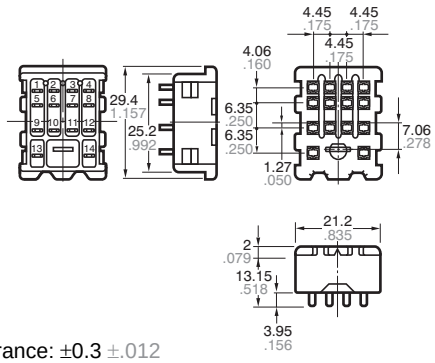

General tolerance: ±0.3 ±.012

PC board pattern (Bottom view)

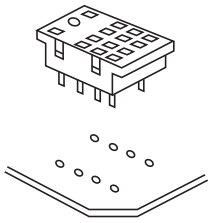

With a relay mounted

Hold-down clip is packaged with the socket.

Side-by-side installation

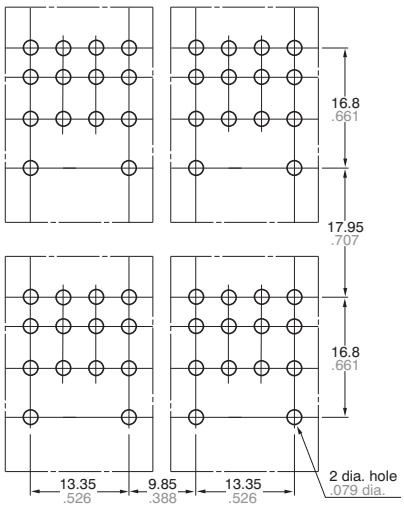

1 Form C

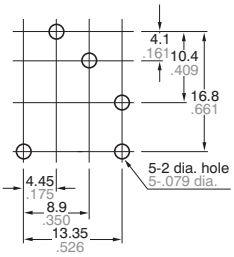

2 Form C

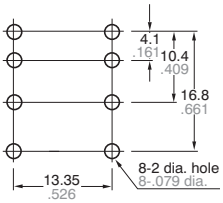

3 Form C

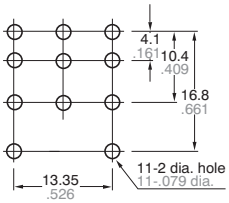

4 Form C

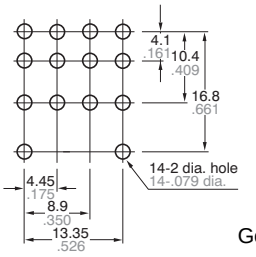

General tolerance: ±0.1 ±.004

3. Wrapping type sockets

Standard wrapping type sockets (HC4-WS-K)

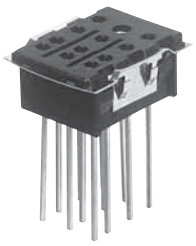

External dimensions

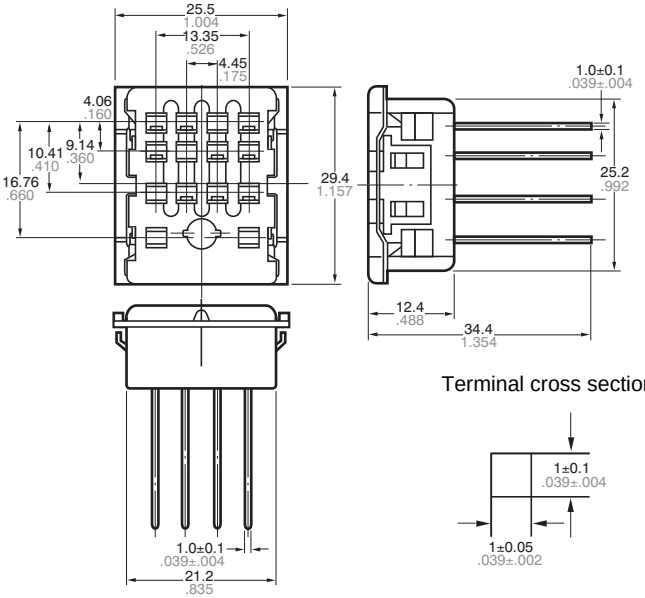

Terminal cross section

Hold-down clip

(Hold-down clip is packaged with the socket)

General tolerance: ±0.3 ±.012

Note: The external and mounting dimensions are the same for 1-pole (HC1-WS-K), 2-pole (HC2-WS-K), and 3-pole (HC3-WS-K) types. Only the number of terminals varies.

Wrapping type sockets with hold-down clip (HC4-WS)

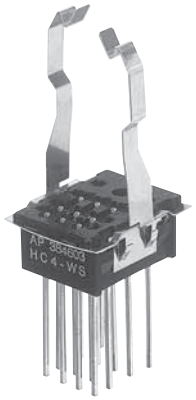

External dimensions

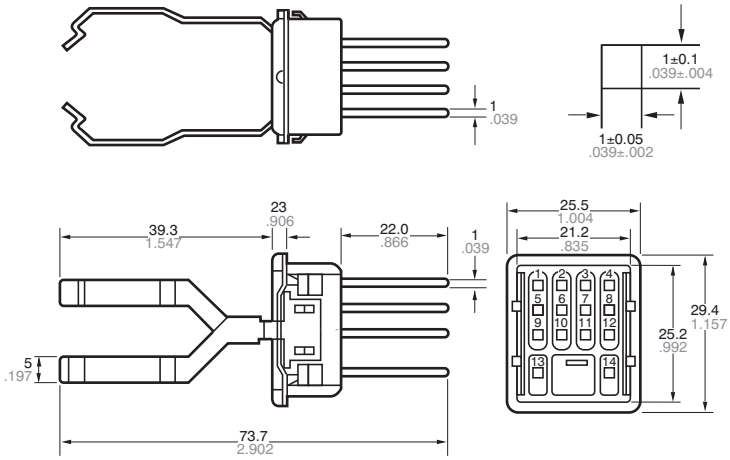

Terminal cross section

General tolerance: ±0.7 ±.028

Mounting hole diagram

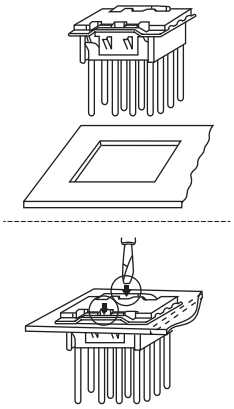

Side-by-side installation

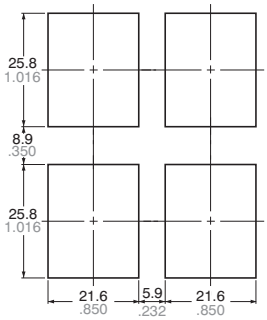

General tolerance: ±0.2 ±.008

Notes:
1. Applicable chassis board thickness is 1.0 to 2.0 mm.
2. Installation is easy by inserting the socket from the top into the holes and by depressing the two down arrows on the retention fitting from the front.

4. DIN rail Terminal sockets (ⓘ Sockets marked are discontinued as of March 31, 2013.)

HC2-Slim type DIN rail terminal sockets (HC2-SFD-S)

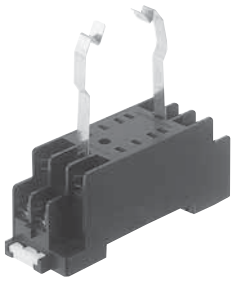

External dimensions

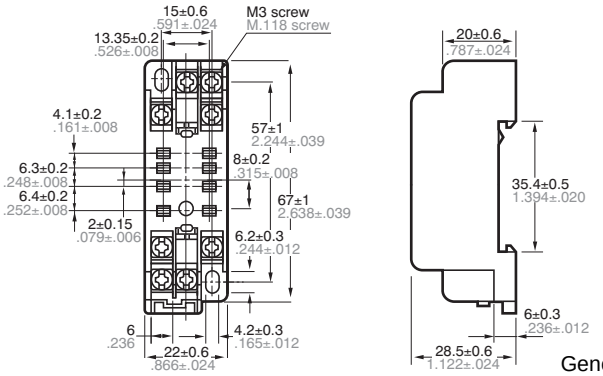

Schematic

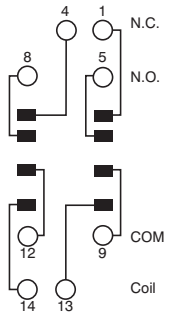

General tolerance: ±0.5 ±.020

ⓘ HC2-high DIN rail terminal socket (HC2-SFD-K)

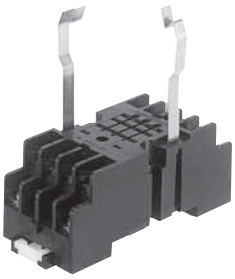

External dimensions

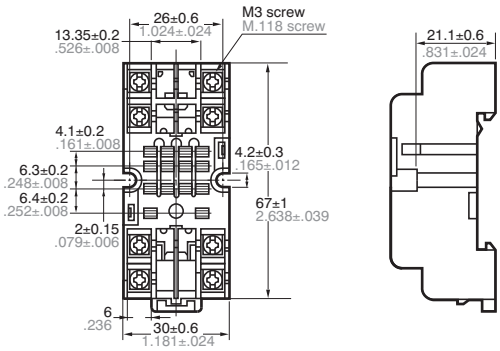

Schematic

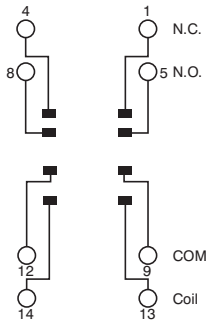

General tolerance: ±0.5 ±.020

HC3-high DIN rail terminal socket (HC3-SFD-K)

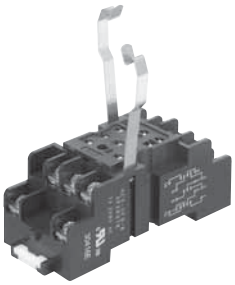

External dimensions

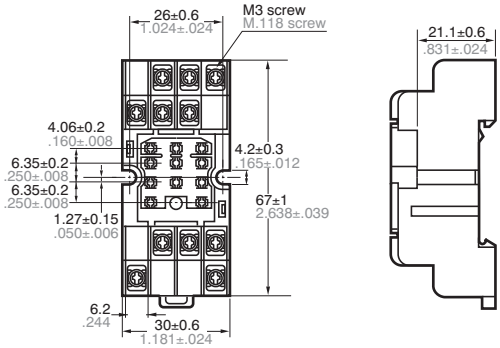

Schematic

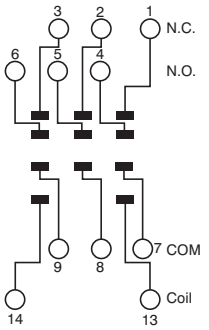

General tolerance: ±0.5 ±.020

ⓘ HC4-high DIN rail terminal socket (HC4-SFD-K)

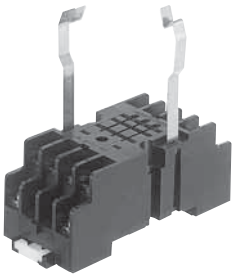

External dimensions

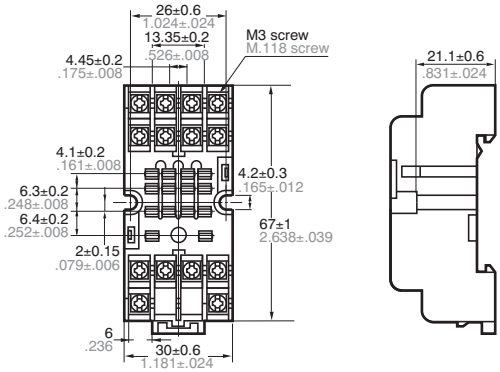

Schematic

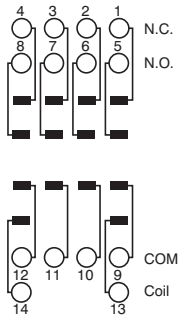

General tolerance: ±0.5 ±.020

HC vertical type terminal socket (HC4-TSF-K)

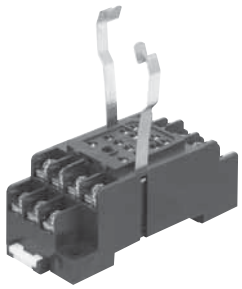

External dimensions

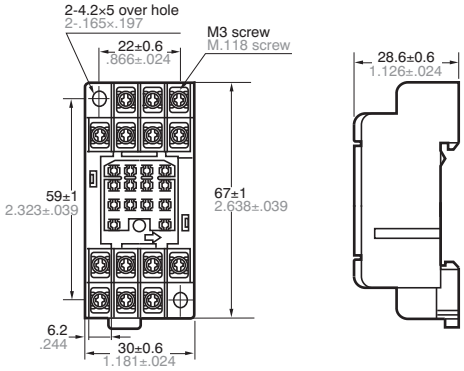

Schematic

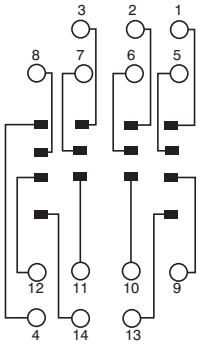

General tolerance: ±0.5 ±.020

Mounting hole diagram

HC2-Slim type

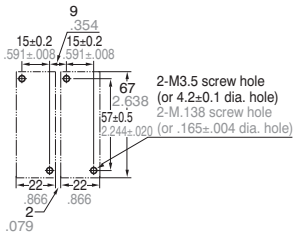

HC2, HC3 and HC4

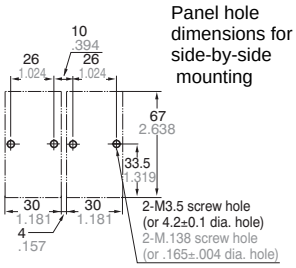

HC vertical type

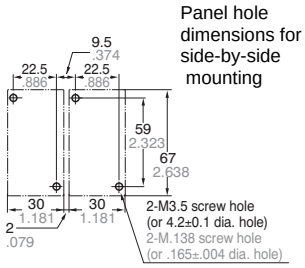

General tolerance: ±0.1 ±.004

With a relay mounted (HC4-SFD-K)

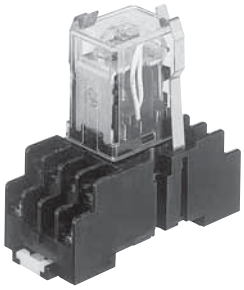

Hold-down clip is packaged with the terminal socket.

5. Ordinary terminal sockets

HC2-terminal socket (HC2-SF-K for HC2)

External dimensions

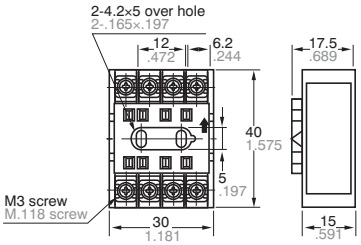

Schematic

General tolerance: ±0.5 ±.020

HC3-high terminal socket (HC3-HSF-K) suitable for both HC2 and HC3

External dimensions

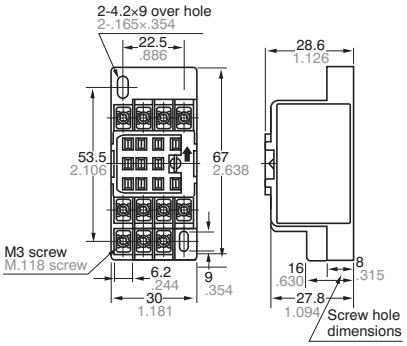

Schematic

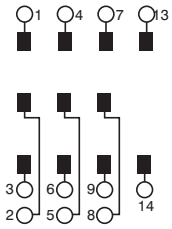

General tolerance: ±0.5 ±.020

HC4-high terminal socket (HC4-HSF-K) suitable for HC 1, 2 and 4

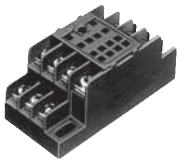

External dimensions

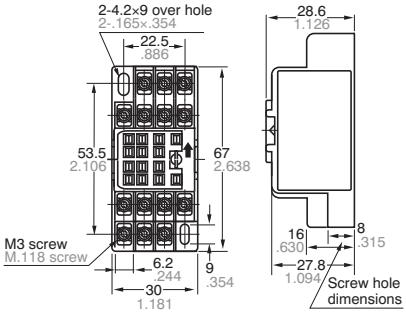

Schematic

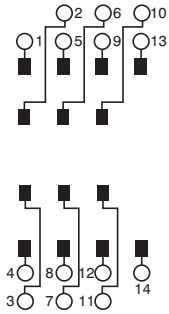

General tolerance: ±0.5 ±.020

Mounting hole diagram

HC2-SF-K

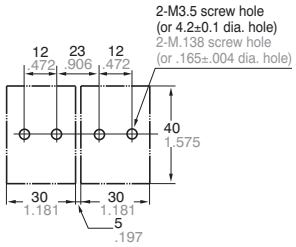

Panel hole dimensions for side-by-side mounting

HC3-HSF-K and HC4-HSF-K

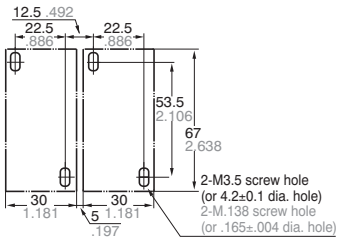

Panel hole dimensions for side-by-side mounting

With a relay mounted (HC2-SF-K)

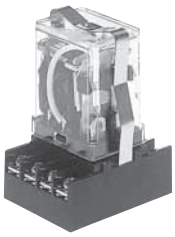

Hold-down clip is packaged with the terminal socket.

General tolerance: ±0.1 ±.004