Panasonic

PROGRAMMABLE CONTROLLER

FP2 Multi-wire Link Unit

Technical Manual

ARCT1F302E-4

2013.7 | panasonic.net/id/pidsx/global

Safety Precautions

Observe the following notices to ensure personal safety or to prevent accidents.
To ensure that you use this product correctly, read this User's Manual thoroughly before use.
Make sure that you fully understand the product and information on safety.
This manual uses two safety flags to indicate different levels of danger.

WARNING

If critical situations that could lead to user's death or serious injury is assumed by mishandling of the product.

-Always take precautions to ensure the overall safety of your system, so that the whole system remains safe in the event of failure of this product or other external factor.
-Do not use this product in areas with inflammable gas. It could lead to an explosion.
-Exposing this product to excessive heat or open flames could cause damage to the lithium battery or other electronic parts.

CAUTION

If critical situations that could lead to user's injury or only property damage is assumed by mishandling of the product.

-To prevent excessive exothermic heat or smoke generation, use this product at the values less than the maximum of the characteristics and performance that are assured in these specifications.
-Do not dismantle or remodel the product. It could cause excessive exothermic heat or smoke generation.
-Do not touch the terminal while turning on electricity. It could lead to an electric shock.
-Use the external devices to function the emergency stop and interlock circuit.
-Connect the wires or connectors securely.
The loose connection could cause excessive exothermic heat or smoke generation.
-Do not allow foreign matters such as liquid, flammable materials, metals to go into the inside of the product. It could cause excessive exothermic heat or smoke generation.
-Do not undertake construction (such as connection and disconnection) while the power supply is on. It could lead to an electric shock.

Copyright / Trademarks

-This manual and its contents are copyrighted.
-You may not copy this manual, in whole or part, without written consent of Panasonic Industrial Devices SUNX Co., Ltd.
-Windows is a registered trademark of Microsoft Corporation in the United States and other countries.
-All other company names and product names are trademarks or registered trademarks of their respective owners.

Table of Contents

Before You Start v

Chapter 1 General Specifications

1.1 How the Multi-wire Link Unit Works . . . . . 1 - 3
1.1.1 MEWNET-W Mode . . . . . 1 - 4
1.1.2 MEWNET-W2 Mode . . . . . 1 - 5
1.1.3 MEWNET-F Mode . . . . . 1 - 6
1.2 Specifications . . . . . 1 - 8
1.2.1 General Specifications . . . . . 1 - 8
1.2.2 Transmission Specifications . . . . . 1 - 9
1.2.3 Performance Specifications . . . . . 1 - 10
1.2.3.1 W and W2 Modes . . . . . 1 - 10
1.2.3.2 F Mode . . . . . 1 - 11
1.2.4 Transmission Cable Specifications . . . . . 1 - 12
1.3 Restrictions When Combinations Are Used . . . . . 1 - 14
1.3.1 Restrictions on the CPU . . . . . 1 - 14
1.3.2 Restrictions on the Installation Position . . . . . 1 - 14
1.3.3 Restrictions on the Number of Units that can be Installed . . . . . 1 - 15
1.4 Confirming the Design Contents . . . . . 1 - 16
1.4.1 Confirming the Current Consumption . . . . . 1 - 16
1.4.2 Confirming I/O Allocations . . . . . 1 - 16
1.4.3 Confirmation When Multiple Units are Installed . . . . . 1 - 17

Chapter 2 Parts and Its Functions

2.1 Parts Terminology . . . . . 2 - 3
2.1.1 Status Indicator LEDs . . . . . 2 - 5
2.1.2 Slave Station Number Display Selector Switch . . . . . 2 - 6
2.2 Switch Settings . . . . . 2 - 7
2.2.1 Station Number Selector . . . . . 2 - 7
2.2.2 Mode Selector Switches (1) . . . . . 2 - 8
2.2.3 Mode Selector Switches (2) . . . . . 2 - 9

Chapter 3 Wiring

3.1 Wiring . . . . . 3 - 3
3.1.1 Transmission Cable Wiring . . . . . 3 - 3
3.1.2 Crimp Terminal Specifications . . . . . 3 - 4

Chapter 4 MEWNET-W Mode

4.1 W Mode Functions . . . . . 4 - 3
4.1.1 PC Link Function . . . . . 4 - 3
4.1.2 Data Transfer Function . . . . . 4 - 3
4.1.3 Remote Programming Function . . . . . 4 - 3
4.2 PC Link . . . . . 4 - 4
4.2.1 Preparing to Use PC Link . . . . . 4 - 4
4.2.2 Link Area Allocations . . . . . 4 - 4
4.2.3 Link Area Allocation Example . . . . . 4 - 5
4.2.4 Sample PC Link Program . . . . . 4 - 8
4.2.5 Precautions When Allocating Link Areas . . . . . 4 - 10

Appendix A What to Check If a Problem Occurs

A.1 If the CPU ERROR LED Lights . . . . . 5 - 3
A.2 Confirming the Mode Being Used . . . . . 5 - 4
A.3 What to Check When the ERR LED Is Lighted or Blinking . . . . . 5 - 5
A.4 What to Do If a Transmission Error Occurs . . . . . 5 - 6

Appendix B Dimensions

Index . . . . . i - 1

Record of changes . . . . . R - 1

Before You Start

CPU Versions Supported

This unit supports CPU Ver. 1.05 and subsequent versions. Confirm the version on the side panel seal on the CPU, or on the [STATUS DISPLAY] in the [MONITOR] menu of the NPST-GR.

Selecting Cables

Cables which can be used with this unit vary depending on the mode being used. For information on cable connections, refer to section 3.1.

Mode	Cables used
MEWNET-W **MEWNET-W2**	Twisted pair cable
MEWNET-F	Twisted pair cable, VCTF cable

About Selecting MEWNET-W2

In order to use the FP2 Multi-wire link unit in MEWNET-2 mode, the user must write a program on a level of about 300 steps. Proceed only after carefully going over the specifications.
Please inquire about more detailed materials regarding MEWNET-W2.

Reference Manuals

The following reference manuals are available for use with this unit, and should be used in conjunction with this manual.

Manual name	Manual number	Description
FP2 Hardware manual	ARCT1F298E	This introduces the hardware configuration, wiring methods, I/O allocation, maintenance methods, and other information pertaining to the FP2 series.
FP3/FP5 W TYPE (WIRE) LINK SYSTEM Manual	ACG-M0032	This introduces the hardware configuration, wiring methods, I/O allocation, maintenance methods, and other information pertaining to the MEWNET-W. Refer to this manual when using the MEWNET-W mode.
FP3/FP5 REMOTE I/O SYSTEM Manual	ACG-M0028	This introduces the hardware configuration, wiring methods, I/O allocation, maintenance methods, and other information pertaining to the MEWNET-F. Refer to this manual when using the MEWNET-F mode.

Chapter 1

General Specifications

1.1 How the Multi-wire Link Unit Works . . . . . 1 - 3

1.1.1 MEWNET-W Mode . . . . . 1 - 4

1.1.2 MEWNET-W2 Mode . . . . . 1 - 5

1.1.3 MEWNET-F Mode . . . . . 1 - 6

1.2 Specifications . . . . . 1 - 8

1.2.1 General Specifications . . . . . 1 - 8

1.2.2 Transmission Specifications . . . . . 1 - 9

1.2.3 Performance Specifications . . . . . 1 - 10

1.2.3.1 W and W2 Modes . . . . . 1 - 10

1.2.3.2 F Mode . . . . . 1 - 11

1.2.4 Transmission Cable Specifications . 1 - 12

1.3 Restrictions When Combinations Are Used . 1 - 14

1.3.1 Restrictions on the CPU . . . . . 1 - 14

1.3.2 Restrictions on the Installation Position . . . . . 1 - 14

1.3.3 Restrictions on the Number of Units that can be Installed . . . . . 1 - 15

1.4 Confirming the Design Contents . . . . . 1 - 16

1.4.1 Confirming the Current Consumption . . . . . 1 - 16

1.4.2 Confirming I/O Allocations . . . . . 1 - 16

1.4.3 Confirmation When Multiple Units are Installed . . . . . 1 - 17

1.1 How the Multi-wire Link Unit Works

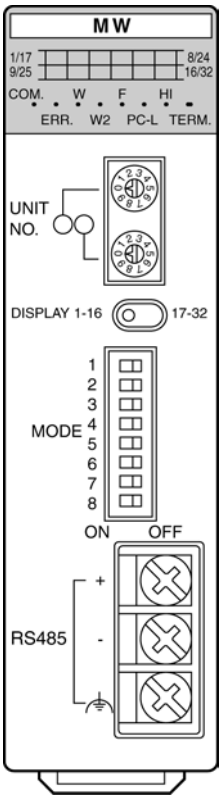

An overview of the multi-wire link unit

The following functions can be accessed with a single FP2 Multi-wire link unit (FP2-MW), by changing the positions of the mode selector switches (2).

- MEWNET-W network: Hereafter referred to as the W mode.
- MEWNET-W2 network: Hereafter referred to as the W2 mode.
- MEWNET-F network: Hereafter referred to as the F mode.

Name	Order number
FP2 Multi-wire link unit	FP2-MW

1.1.1 MEWNET-W Mode

A system can be configured economically between programmable controllers, using twisted pair cables.

Link communication can be carried out between various programmable controllers, using link relays and link registers.

Communication is possible with conventional FP series devices capable of using the MEWNET-W.

The link relays and link registers used for PC Link communication are specified using the system register.

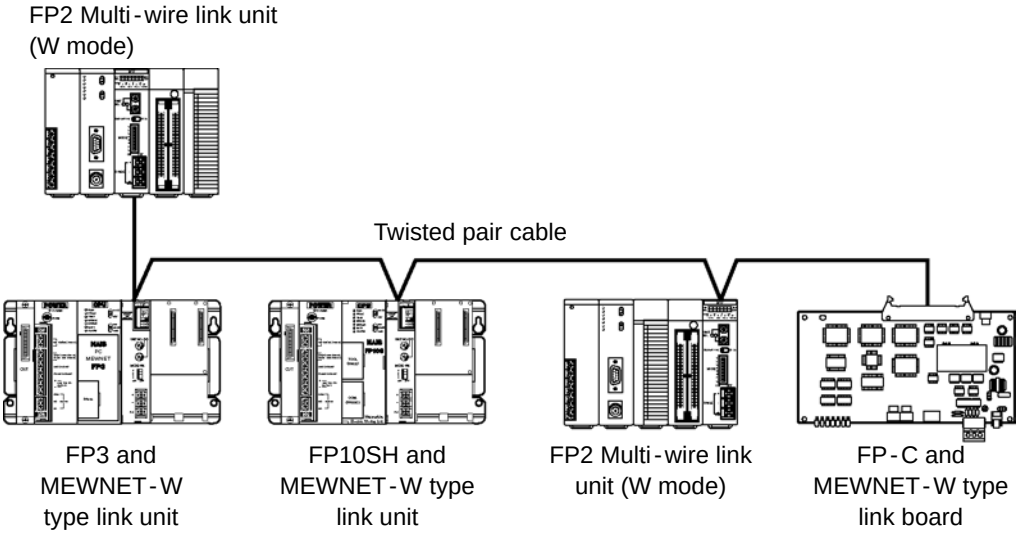

Specifications

Item	Description
Communication method	Token bus
Transmission method	Baseband transmission
Communication path	Twisted pair cable
Transmission distance	Total length: 800 m/2,625 ft.
Transmission speed (Baud rate)	500 kbps
Functions/number of stations	PC link function: max. 16 stations
	Data transfer function: max. 32 stations
PC link capacity per one unit	Link relay: 1,024 points
	Link register: 128 words
Other functions	Remote programming
Interface	Conforming to RS485
R.A.S. function	Hardware self-diagnostic function

1.1.2 MEWNET-W2 Mode

Large volumes of data can now be transmitted over long distances.
Link communication can be carried out between various FP2 units, using link relays and link registers.

Communication limited to only FP2 units is possible.

Using the MEWNET-W mode increases the volume of data that can be handled.

Using the MEWNET-W mode extends the transmission distance (when set to 250 kbps).

The link relay and link register areas used for PC link communication are specified using user programs.

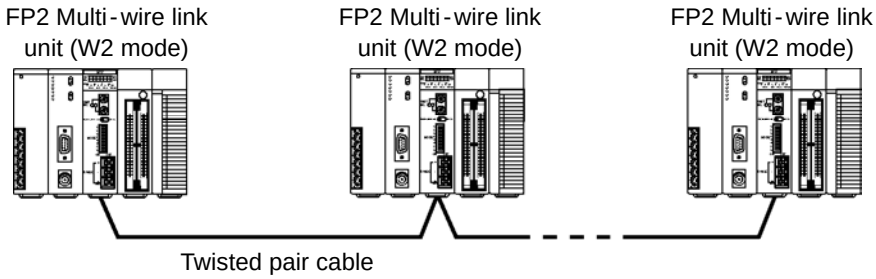

Specifications

Item		Description
Communication method		Token bus
Transmission method		Baseband transmission
Communication path		Twisted pair cable
Transmission distance	**at 250 kbps**	Total length: 1200 m/3,937 ft.
	at 500 kbps	Total length: 800 m/2,625 ft.
Transmission speed (Baud rate)		500 kbps or 250 kbps
Functions/number of stations		PC link function: max. 32 stations
		Data transfer function: max. 32 stations
PC link capacity per one unit		Link relay: 4,096 points
		Link register: 4,096 words
Other functions		Remote programming
Interface		Conforming to RS485
R.A.S. function		Hardware self-diagnostic function

☞ **Note**

When using the PC Link in the MEWNET-W2 mode, the default settings must be obtained from the user program.

1.1.3 MEWNET-F Mode

Dual-core cables reduce the amount of wiring in the remote I/O system.
Remote I/O control is possible, using the FP2 as the master station.

Communication with conventional slave stations is possible, using the FP2 as the master station.

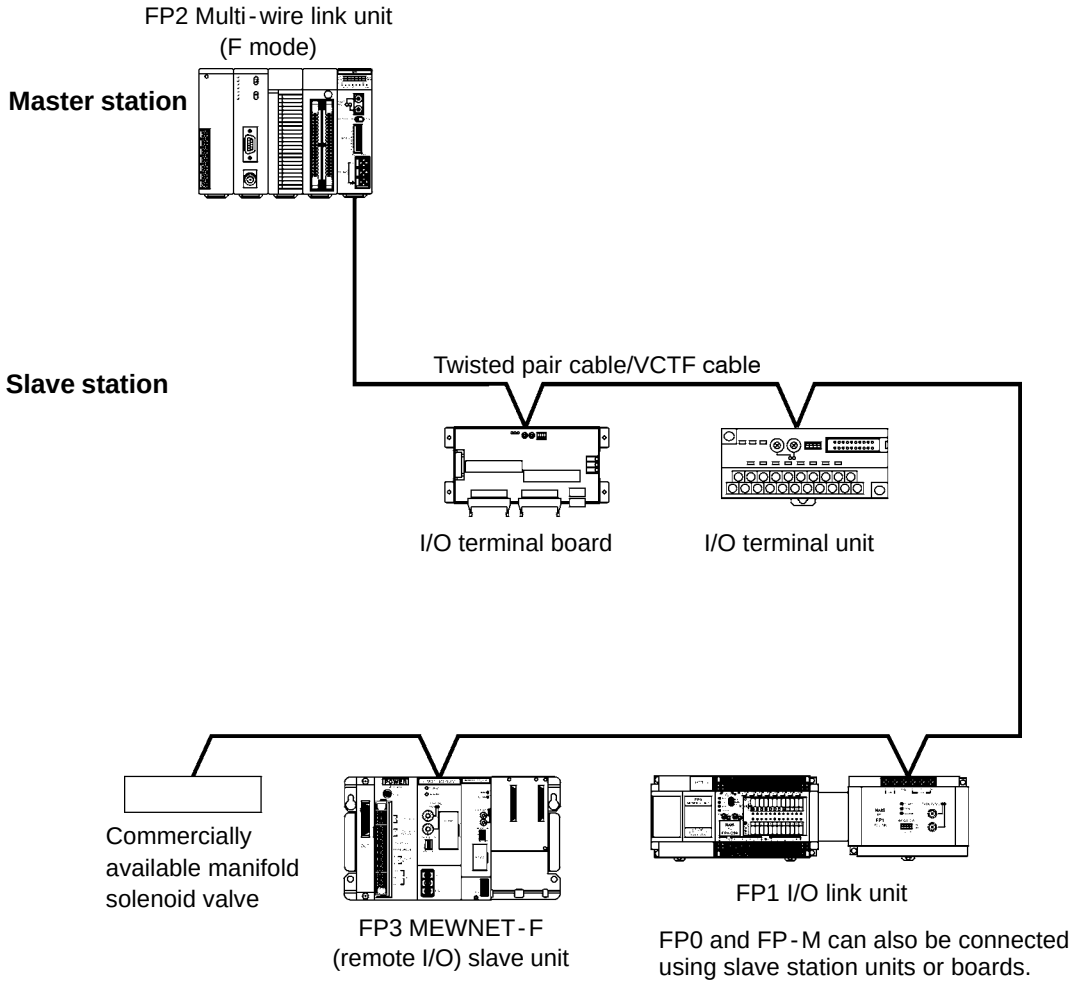

Specifications

Item	Description
Communication method	Two-line, half-duplex transmission
Synchronization method	Start-stop synchronous system
Communication path	Twisted pair cable or VCTF cable
Transmission distance	Total distance: max. 700 m/2,296.59 ft
Transmission speed (Baud rate)	500 kbps
Number of slave stations	Max. 32 stations
Controllable I/O points	Max. 2,048 points
Interface	Conforming to RS485
Transmission error check	CRC (Cyclic Redundancy Check) method

☞ **Note**

The user should avoid mixing different types of transmission cables in a single network. The same type of transmission cable should be used throughout the network.

1.2 Specifications

1.2.1 General Specifications

Item	Descriptions
Ambient temperature	0 to 55 °C/32 to 131 °F
Storage temperature	-20 to +70 °C/-4 to +158 °F
Ambient humidity	30 to 85 % RH (non-condensing)
Storage humidity	30 to 85 % RH (non-condensing)
Breakdown voltage	500 V AC, 1 minute between external terminal and frame ground terminal
Insulation resistance	100 MΩ or more (measured with a 500 V DC megger testing) between external terminal and frame ground terminal
Vibration resistance	10 to 55 Hz, 1 cycle/min: double amplitude of 0.75 mm/ 0.030 in., 10 min on 3 axes
Shock resistance	98 m/s^2 or more, 4 times on 3 axes
Noise immunity	1,000 Vp-p with pulse widths 50 ns and 1 μs (based on in-house measurements)
Operating conditions	Free from corrosive gases and excessive dust
Current consumption	220 mA or less (at 5 V DC) (* Note)
Weight	Approx. 110 g/3.880 oz

☞ **Note**

For information concerning restrictions on current consumption, refer to section 1.4.1.

1.2.2 Transmission Specifications

Item	Descriptions		
	W mode	**W2 mode**	**F mode**
Communication method	Token bus method		Polling method
Transmission method	Baseband transmission method		
Transmission speed (Baud rate)	500kbps	500kbps/250kbps	500kbps
Transmission distance (* section 1.2.4)	Overall distance: max. 800m/2,625 ft.	Overall distance: max. 1200m/3,937 ft. (at 250 kbps) 800m/2,625 ft. (at 500 kbps)	Overall distance: max. 700m/2,296.58 ft.
Number of slave stations	Max. 32 stations		One master unit and max. 32 slave stations
Error check method	CRC (Cyclic Redundancy Check) method		
Synchronized method	Start-stop synchronous system		
Interface	Conforming to RS485		
Communication path	Twisted pair cable		Twisted pair cable, VCTF cable
RAS function	Hardware self-diagnostic function		

1.2.3 Performance Specifications

1.2.3.1 W and W2 Modes

Item			Specification	
			W mode	**W2 mode**
Communication functions			PC link Computer link Data transfer Remote programming Hierarchical link	
Functions/number of stations		**PC link**	Max. 16 stations	Max. 32 stations
		Other functions	Max. 32 stations	
PC link	**Area of use**	**Link relays**	Fixed at WL	Set by selecting among WL, WR, LD, DT and FL. (* Note)
		Link registers	Fixed at LD	
	Setting method		Specified using system register.	Specified using user program.
	Capacity	**Link relays**	Max. 1,024 points	Max. 4,096 points (* Note)
		Link registers	Max. 128 words	Max. 4,096 words (* Note)
Movement status/ error alert	**Area of use**		Special internal relays Special data registers	Special internal relays Special data registers Detailed information is output to WL, WR, LD, DT, or FL, depending on the setting.
	Setting method		—	Specified using **F145 (SEND)/P145 (PSEND)** instruction.
Data transfer capacity			Max. 16 words	Max. 1,020 words

☞ **Note**

Use a program to keep WL, WR, LD, DT and FL settings within the PC link capacity.

1.2.3.2 F Mode

Item	Specification
Controllable points per one CPU	Max. 2,048 points
Controllable points per one unit	Max. 2,048 points
Controllable slots per one CPU	Max. 128 slots
Controllable slots per one unit	Max. 64 slots
Controllable master units per one CPU	Max. 4 units

1.2.4 Transmission Cable Specifications

The user should avoid mixing different types of transmission cables in a single network. The same type of transmission cable should be used throughout the network.

Table of cables

Trans-mission cable	Sectional view	Specification			Guaranteed transmission distance			
					W mode	W2 mode		F mode
						500kbps	250kbps	
Shielded twisted pair cable	Fig. 1 below	Conduc-tor	Size	Min. 1.25 mm^2 (AWG16 or more)	800 m/ 2,625 ft.	800 m/ 2,625 ft.	1200 m/ 3,937 ft.	700 m/ 2,296.59 ft. (300 m/ 984.25 ft.) (* Note 2)
			Resistance	Max. 16.8 Ω/km (at 20 °C/ 68 °F)				
		Insulator	Material	Polyethylene				
			Thickness	Max. 0.5 mm/ 0.020 in.				
		Cable diameter		Approx. 8.5 mm/ 0.335 in.				
Shielded twisted pair cable		Coinduc-tor	Size	Min. 0.5 mm^2 (AWG20 or more)	700 m/ 2,296.59 ft.	700 m/ 2,296.59 ft.	1100 m/ 3,617.24 ft.	600 m/ 1,968.50 ft. (300 m/ 984.25 ft.) (* Note 2)
			Resistance	Max. 33.4 Ω/km (at 20 °C/68 °F)				
		Insulator	Material	Polyethylene				
			Thickness	Max. 0.5 mm/ 0.020 in.				
		Cable diameter		Approx. 7.8 mm/ 0.307 in.				
VCTF cable (* Note 3)	Fig. 2 below	Condiuc-tor	Size	Min. 0.75 mm^2 (AWG18 or more)	Not available			400 m/ 1,312.34 ft. (200 m/ 656.17 ft.) (* Note 2)
			Resistance	Max. 25.1 Ω/km (at 20 °C/68 °F)				
		Insulator	Material	Polyvinyl choride (* Note 1)				
			Thickness	Max. 0.6 mm/ 0.024 in.				
		Cable diameter		Approx. 6.6 mm/ 0.260 in.				

Sectional view of cable

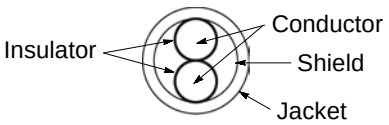

Fig. 1 Shielded twisted pair cable

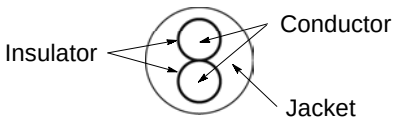

Fig. 2 VCTF cable

☞ **next page**

☞ Notes

- **(*1): Because polyvinyl chloride has poorer electrical characteristics than polyethylene, the overall transmission distance is shorter.**
- **(*2): If products with the order numbers listed below are included in the network when the F mode is used, the maximum transmission distance is the distance noted in parentheses. Information on the various types of commercially available manifold solenoid valves should be confirmed with the manufacturing company.**

Product name	Order number
12 V DC type I/O terminal board	AFP87441
24 V DC type I/O terminal board	AFP87442
FP3 remote I/O slave unit	AFP3741
FP5 remote I/O slave unit	AFP5741
Manifold solenoid valve	————

- **(*3): If transmission is adversely affected by noise in the environment, shielded twisted pair cables should be used.**

1.3 Restrictions When Combinations Are Used

1.3.1 Restrictions on the CPU

Using the FP2 Multi-wire link unit requires CPU Ver. 1.05 or a subsequent version.

Confirm the version on the side panel seal on the CPU, or on the [STATUS DISPLAY] in the [MONITOR] menu of the NPST-GR.

1.3.2 Restrictions on the Installation Position

Mode used	Installation position
W/W2 mode	In the W and W2 modes, the FP2 Multi-wire link unit can be installed only on the basic backplane. It cannot be installed on an expansion backplane. In order to boost reliability, the FP2 Multi-wire link unit should be installed as close to the CPU as possible. 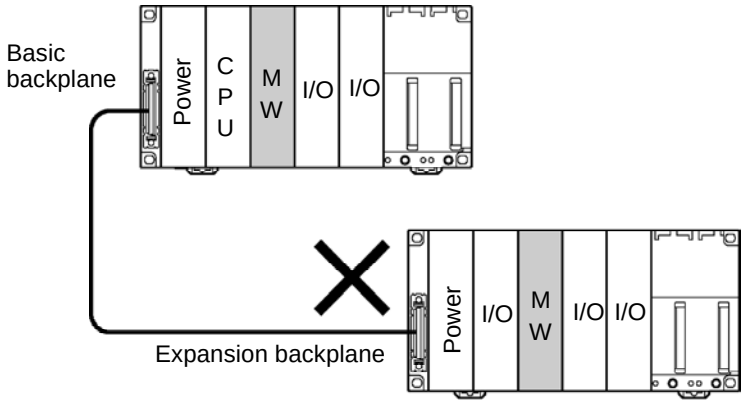
F mode	In the F mode, the FP2 Multi-wire link unit can be installed either on the basic backplane or on an expansion backplane. When the FP2 Multi-wire link unit is used in the F mode, there are no particular restrictions on the installation position. 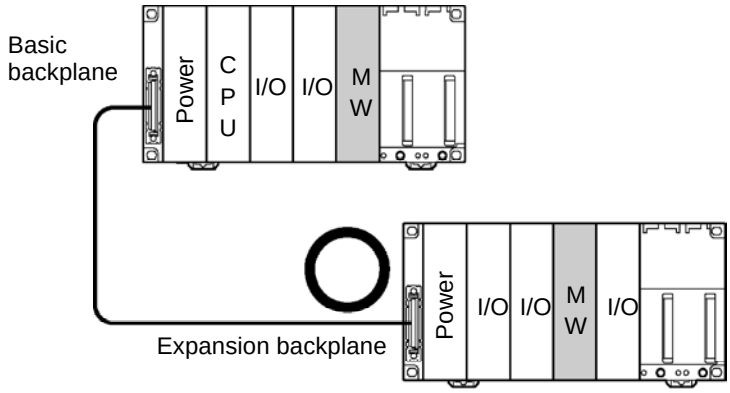

1.3.3 Restrictions on the Number of Units that can be Installed

MEWNET mode	Number of units installed
W mode	Up to three units can be installed for one CPU. (If the Multi-wire link unit is one that can be used with PC link communication, up to two of the three units can be installed.)
W2 mode	Up to three units can be installed for one CPU. (If the Multi-wire link unit is one that can be used with PC link communication, up to two of the three units can be installed.)
F mode	Up to four units can be installed for one CPU.

☞ **Notes**

- **Of the intelligent units scheduled for future marketing, there may be restrictions on the number of units that can be installed if the unit is equipped with link functions.**
- **The various MEWNET modes may be used in combination within the individual ranges of restrictions that apply. For instance, three W mode units may be used in combination with three W2 mode units and four F mode units, for a maximum number of ten multi-wire link units.**

1.4 Confirming the Design Contents

1.4.1 Confirming the Current Consumption

When the system architecture is configured, the internal current consumption of the Multi-wire link unit (with a 5 V DC power supply) should be kept within the range of the power supply unit, taking into consideration the conditions under which other units are used.

Product name	Order number	Current consumption (at 5 V DC)
FP2 Multi-wire link unit	FP2-MW	220mA or less

For information on the internal current consumption of other units, refer to the FP2 Hardware Manual and the manuals for the other units.

1.4.2 Confirming I/O Allocations

When a FP2 Multi-wire link unit is installed, it automatically occupies 16SE (16 points). This can be changed to 0SE, however, using the NPST-GR programming software.

1.4.3 Confirmation When Multiple Units are Installed

Multi-wire link units which have been installed are called root No. 1, root No. 2, root No. 3, and root No. 4, in sequential order, with root No. 1 being closest to the CPU.

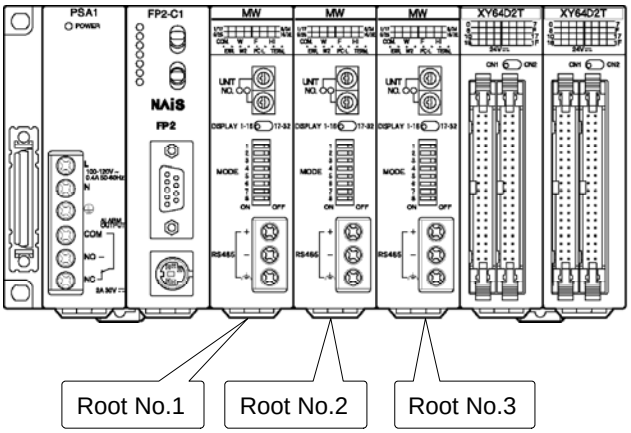

When using PC link communication in the W mode, these are labeled “For PC link 0” and “For PC link 1”, in order of their proximity to the CPU.

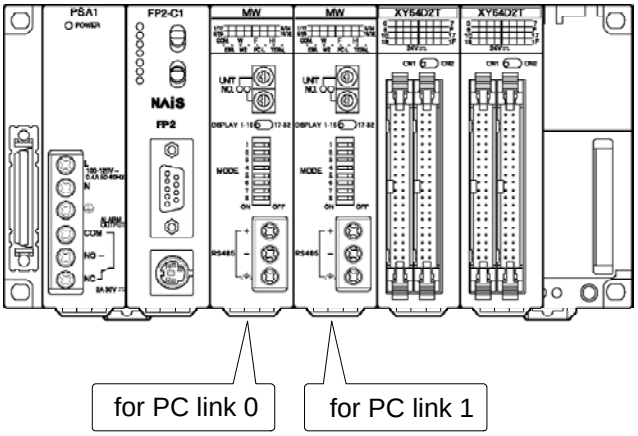

When using PC link communication in the W2 mode, the link relays and link registers have separate work areas for PC link 0 and PC link 1, and settings must be entered separately for each unit.

1.4 Confirming the Design Contents

Chapter 2

Parts and Its Functions

2.1 Parts Terminology . . . . . 2 - 3

2.1.1 Status Indicator LEDs . . . . . 2 - 5

2.1.2 Slave Station Number Display Selector Switch . . . . . 2 - 6

2.2 Switch Settings . . . . . 2 - 7

2.2.1 Station Number Selector . . . . . 2 - 7

2.2.2 Mode Selector Switches (1) . . . . . 2 - 8

2.2.3 Mode Selector Switches (2) . . . . . 2 - 9

2.1 Parts Terminology

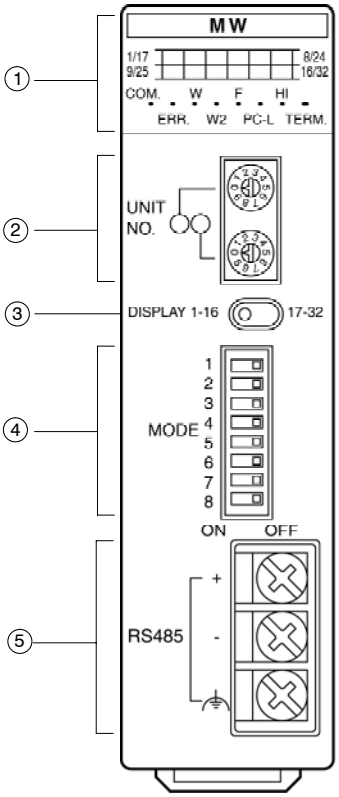

Front

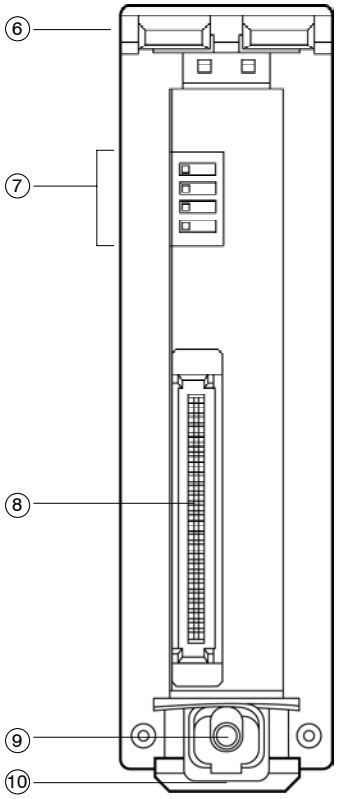

Rear

Parts terminology and functions

① Status indicator LEDs (* Section 2.1.1)

This displays the operation status of the unit, including information such as whether the unit is operating or stopped, errors and alarms, and the communication mode.

② Station number selector (Used only in the W and W2 modes.) (* Section 2.2.1)

This specifies the unit number for a given unit in the network.
In the W mode, the setting becomes effective at the instant when the station number is changed. In the W2 mode, the station number should be changed with the power off. The setting becomes effective the next time that the power is turned on.

③ Slave station number display selector switch (Used only in the F mode.) (* Section 2.1.2)

This is used to switch the slave station number displayed on the operation display LED.

④ Mode selector switches (1) (* Section 2.2.2)

These are used to set the operation mode (PC link mode, non-PC link mode, terminal station). The setting of the mode selector switches should be changed with the power off. The setting becomes effective the next time that the power is turned on. The setting for the terminal station becomes effective at the instant when it is entered.

☞ **next page**

⑤ Transmission terminal (RS485) (* Section 3.1.1)

The transmission cable is connected here.

⑥ Installation tab

These protruding sections are used to install backplanes for the FP2.

⑦ Mode selector switches (2) (* Section 2.2.3)

These are used to set the operation mode (W, W2, F modes, communication speed). The setting of the mode selector switches should be changed with the power off. The setting becomes effective the next time that the power is turned on.

⑧ Backplane connector

The connector for the unit on the FP2 backplane is connected here.

⑨ Unit installation screw

This screw is used to secure the unit for the FP2 to the backplane.

⑩ Temporary holding hook

This temporary holding hook is used to secure the unit for the FP2 to the backplane.

2.1.1 Status Indicator LEDs

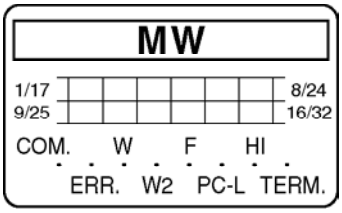

○ : ON, ◕ : Rapid blinking (blinking interval: 0.2 sec), ◴ : Slow blinking (blinking interval: 1.0 sec), ● : OFF

LED	Item	Operation		
		W mode	W2 mode	F mode
COM.	Communication status	○ : Normal communication in progress ● : Communication error (transmission disabled)	○ : Normal communication in progress ◴ : Communication buffer overload occurred ● : Communication error (transmission disabled)	○ : Communication standby ◕ : Normal communication in progress ◴ : Stop mode transmission in progress ● : Communication error
ERR.	Hardware/software error	○ : Hardware/software error ◕ : Booting standby error (* Note 1) ◴ : Various other errors (* Note 2) ● : Normal	○ : Hardware/software error ◕ : Booting standby error (* Note 1) ◴ : Various other errors (* Note 2) ● : Normal	○ : Hardware/software error ◕ : Setting error ● : Normal
W	W mode	○ : W mode status	● : Not W mode	● : Not W mode
W2	W2 mode	● : Not W2 mode	○ : W2 mode status	● : Not W2 mode
F	F mode	● : Not F mode	● : Not F mode	○ : F mode status

☞ **Notes**

- **(*1): This occurs if the version of the FP2 CPU is a version previous to Ver.1.05.**
- **(*2): This occurs if there is a transmission error, the slave station number is out of range, station numbers are overlapped, or link area allocations are overlapped.**

☞ **next page**

○: ON, ◑: Rapid blinking (blinking interval: 0.2 sec), ◐: Slow blinking (blinking interval: 1.0 sec), ●: OFF

LED	Item	Operation		
		W mode	W2 mode	F mode
PC-L	PC link flag (effective only in W and W2 modes)	○ :PC link operation status ● :PC link stopped/non-PC link operation status	○ :PC link operation status ◑ :PC link operation disabled status ● :Non-PC link operation status	● :Not used
HI	Communication speed	○ :500kbps (fixed)	○ :500kbps ● :250kbps	○ :500kbps (fixed)
TERM.	Terminal station	○ :This is the terminal station. ● :This is not the terminal station.		
1/17 - 8/24 9/25 - 16/32	Slave station display (effective only in F mode)	● :Not used		○ :Connected ● :Not connected *Slave station numbers are changed using the slave station number display selector switch.

2.1.2 Slave Station Number Display Selector Switch

This is used to change the slave station number displayed on the operation status indicator LEDs. It is used only in the F mode.

Item	Setting contents
1-16	Connected station Nos. 1 to 16 are displayed.
17-32	Connected station Nos. 17 to 32 are displayed.

2.2 Switch Settings

2.2.1 Station Number Selector

These are used to set the local station number in the W and W2 modes.
(Not used in the F mode.)

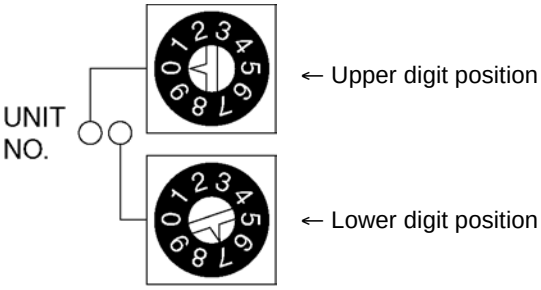

Align the arrow with the number to be used. (The illustration shows an example in which the arrow points to 07 (No. 7).)

MEWNET mode		Description
W mode	Effective range	01 to 32 (decimal) Specifying a number out of this range will cause a station number setting error to occur.
	Operation	The station number can be changed while in operation. If the number was changed while in operation, the setting becomes effective in that instant. Be aware, however, that if the station number following the change overlaps that of another unit, an error will occur.
W2 mode	Effective range	01 to 64 (decimal) Specifying a number out of this range will cause a station number setting error to occur. (Note: Station numbers 1 to 64 can be used, but the maximum number of slave stations that can actually be connected to the PC link is 32.)
	Operation	The station number cannot be changed while in operation. The power should be turned off before changing the station number. The setting will be effective the next time that the power is turned on. If the setting is changed with the power on, be aware that the setting in effect when the power was turned on will remain effective.

2.2.2 Mode Selector Switches (1)

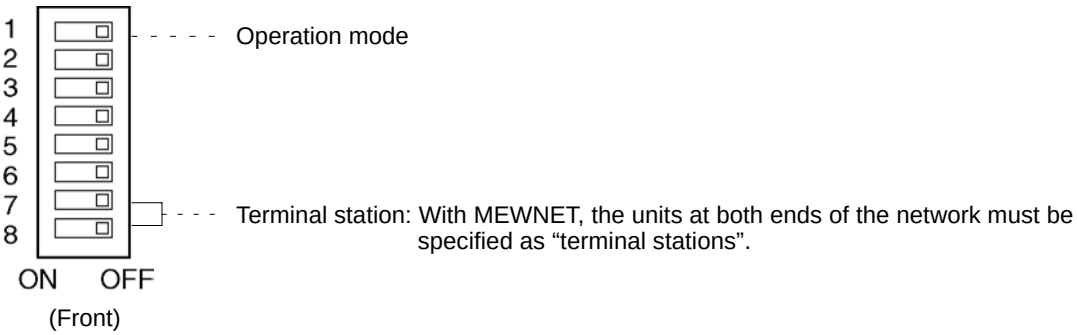

(Front)

When the unit is shipped from the factory, all switches are set to the “OFF” position.

No.	Item		Setting contents		
			W mode	W2 mode	F mode
1	Operation mode	OFF	PC link mode		Operation stops if a communication error occurs.
		ON	Not PC link mode		Operation continues if a communication error occurs.
2	Not used		—	—	—
3					
4					
5					
6					
7	Terminal station	Set to terminal station	7 ON OFF 8		
8		Not set to terminal station	7 ON OFF 8		

☞ Notes

- **The settings of the mode selector switches (1) and (2) should always be changed with the power off. The setting will be effective the next time that the power is turned on. (If the setting is changed with the power on, be aware that the setting in effect when the power was turned on will remain effective.)**
- **Only the settings of the mode selector switches (1) No. 7 and No. 8 (terminal station settings) will be effective at the instant that they are changed.**

2.2.3 Mode Selector Switches (2)

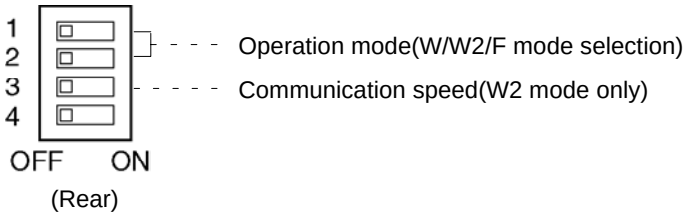

(Rear)

When the unit is shipped from the factory, all switches are set to the ”OFF” position.
The contents of the mode selector switches (2) are indicated by the status indicator LEDs.

No.	Item	Setting contents		
		W mode	W2 mode	F mode
1 2	Operation mode setting	1 OFF ON 2	1 OFF ON 2	1 OFF ON 2
3	Communication speed (* Note 1)	500kbps (fixed)	3 OFF ON 500kbps 3 OFF ON 250kbps	500kbps (fixed)
4	————————	This should always be secured at “OFF” when being used.		

☞ Notes

- **(*1): When the W2 mode is set, 500 kbps and 250 kbps setting units should not be mixed in the same network.**
- **The settings of the mode selector switches (1) and (2) should always be changed with the power off. The setting will be effective the next time that the power is turned on. (If the setting is changed with the power on, be aware that the setting in effect when the power was turned on will remain effective.)**
- **Only the settings of the mode selector switches (1) No. 7 and No. 8 (terminal station settings) will be effective at the instant that they are changed.**

2.2 Switch Settings

Chapter 3

Wiring

3.1 Wiring . . . . . 3 - 3

3.1.1 Transmission Cable Wiring . . . . . 3 - 3

3.1.2 Crimp Terminal Specifications . . . . . 3 - 4

3.1 Wiring

3.1.1 Transmission Cable Wiring

When connecting the transmission terminals (RS485) of the various link units, always connect positive (+) terminals with positive (+) terminals, and negative (-) terminals with negative (-) terminals.

Connect one end of the shielded transmission cable to the frame ground terminal on the transmission terminal (RS485), as shown in the illustration below, to ground it.

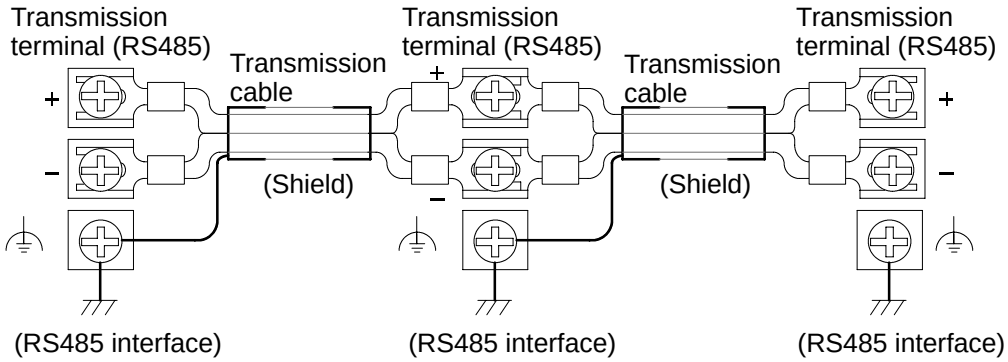

Use forked wiring to connect the various stations. Be careful that multiple stations are not connected to a single terminal.

Correct wiring example

Incorrect wiring example

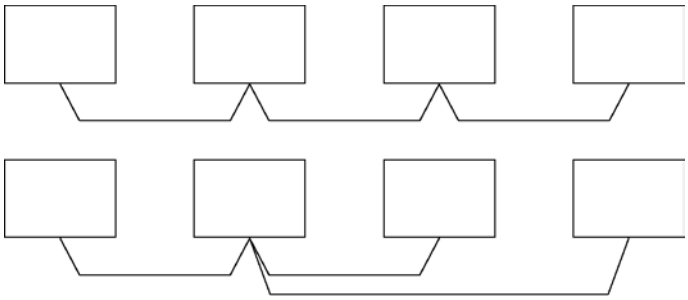

Multiple wiring connections (branches) cannot be used.

3.1.2 Crimp Terminal Specifications

M3 terminal screws are used for the terminals on the FP2 Multi-wire link unit. Crimp terminals with the shape shown below should be used.

Fasten the terminals securely applying a tightening torque of 0.5 to 0.6 N•m.

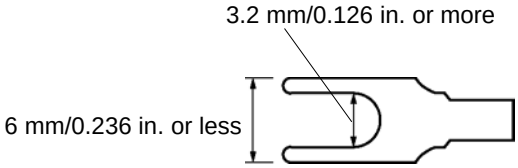

Chapter 4

MEWNET-W Mode

4.1 W Mode Functions . . . . . 4 - 3

4.1.1 PC Link Function . . . . . 4 - 3

4.1.2 Data Transfer Function . . . . . 4 - 3

4.1.3 Remote Programming Function . . . . 4 - 3

4.2 PC Link . . . . . 4 - 4

4.2.1 Preparing to Use PC Link . . . . . 4 - 4

4.2.2 Link Area Allocations . . . . . 4 - 4

4.2.3 Link Area Allocation Example . . . . . 4 - 5

4.2.4 Sample PC Link Program . . . . . 4 - 8

4.2.5 Precautions When Allocating Link Areas . . . . . 4 - 10

4.1 W Mode Functions

4.1.1 PC Link Function

The PC link function is a communication function that enables data to be shared between programmable controllers, using cyclically transmitted link relays (L) and link registers (LD).

In order for the link relay and link register to specify the configuration in which the various CPUs in the same system are to be used, it is necessary to allocate a link area. Link area allocations are specified using system registers (* Section 4.2).

4.1.2 Data Transfer Function

Data transfer is a communication function by which programmable controllers in the same system send and receive information pertaining to contacts and registers, using programs. High-level instructions **F145/P145** and **F146/P146** are used to exchange data directly with other CPUs.

For detailed information, refer to the FP series (FP-C/FP2/FP3/FP5/FP10/ FP10S/ FP10SH) programming manual.

4.1.3 Remote Programming Function

With the remote programming function, the same operations can be carried out from a remote location with respect to programmable controllers in the same system as those possible when the programming software (NPST-GR) has been connected directly to the system.

If the programmable controllers are in the same system, which is connected by the link units, the programming functions of a nearby programmable controller can be used to program other programmable controllers, and for operations such as monitoring the various contacts and registers.

4.2 PC Link

4.2.1 Preparing to Use PC Link

When using PC link in the W mode, link area allocations must be specified.

☞ **Notes**

- **Allocations must be specified for both link relays and link registers.**
- **PC link communication is carried out on a programmable controller which has been booted in the PC link mode.**

4.2.2 Link Area Allocations

Link relays and link registers used with the PC link function are allocated to the link area of CPU. The link area is allocated by specifying the system register for the CPU.

System register

	No.	Name	Default value	Setting range
For PC link 0	40	Specification of range of link relays used for communication	0	0 to 63 words
	41	Specification of range of link registers used for communication	0	0 to 127 words
	42	Starting number for link relay transmission (no. of first word)	0	0 to 63
	43	Link relay transmission size	0	0 to 64 words
	44	Starting number for link register transmission (first number)	0	0 to 127
	45	Link register transmission size	0	0 to 127 words
For PC link 1	50	Specification of range of link relays used for communication	0	0 to 63 words
	51	Specification of range of link registers used for communication	0	0 to 127 words
	52	Starting number for link relay transmission (no. of first word)	64	64 to 127
	53	Link relay transmission size	0	0 to 64 words
	54	Starting number for link register transmission (first number)	128	128 to 255
	55	Link register transmission size	0	0 to 127 words

Link area configuration

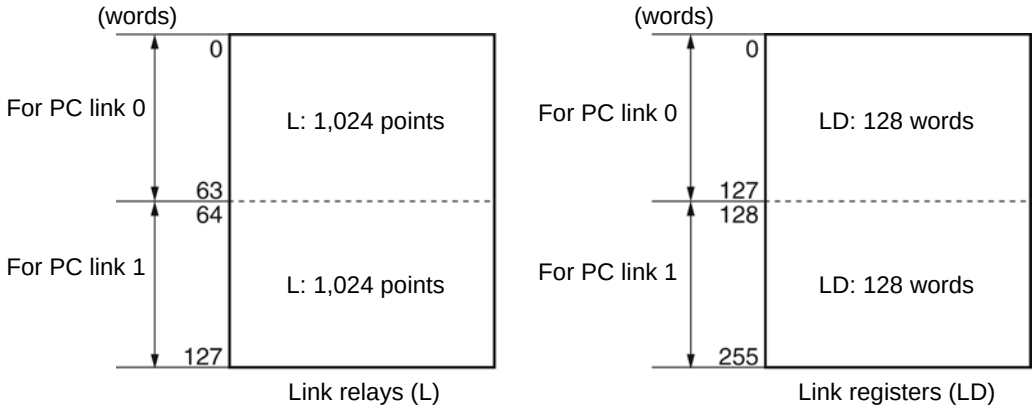

- Link areas consist of link relays and link registers, and are divided into areas for PC link 0 and PC link 1 and used with those units.
- The link relay which can be used in an area for either PC link 0 or PC link 1 is maximum 1,024 points (64 words), and the link register is maximum 128 words.

4.2.3 Link Area Allocation Example

The areas for PC link 0 and PC link 1 are divided into send areas and receive areas. The link relays and link registers are sent from the send area to the receive area of a different programmable controller. Link relays and link registers with the same numbers as those on the transmission side must exist in the receive area on the receiving side.

Example of link area allocation

Link relay allocation

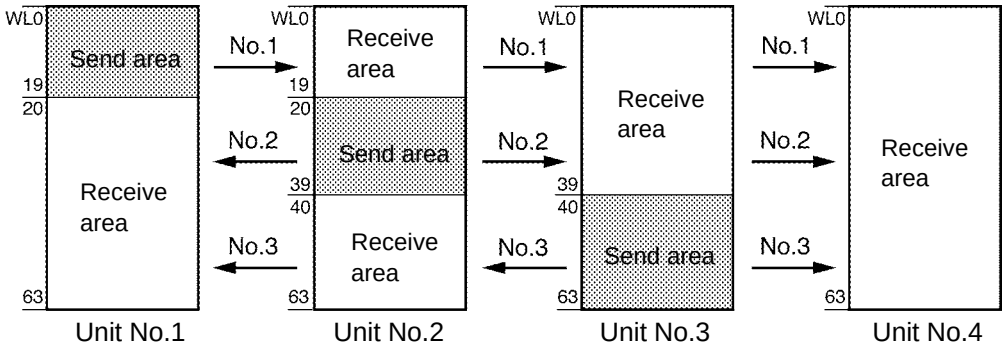

System register		Settings for the various units			
No.	**Setting contents for PC link 0**	**No.1**	**No.2**	**No.3**	**No.4**
40	Link relay range	64	64	64	64
42	Starting no. for link relay transmission	0	20	40	0
43	Link relay transmission size	20	20	24	0

Link register allocation

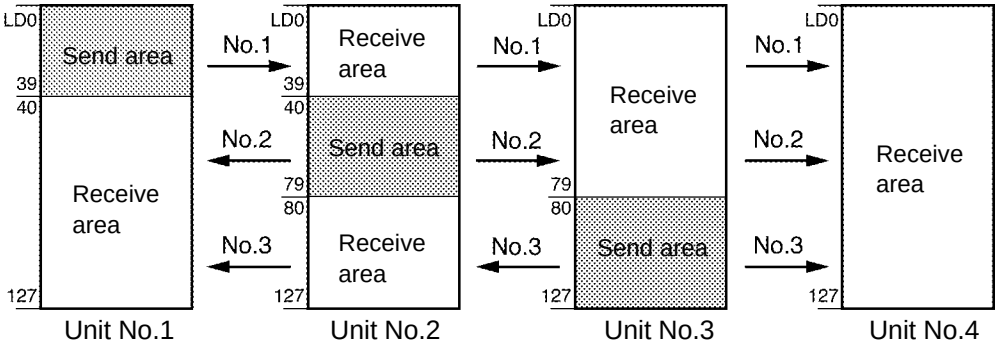

System register		Settings for the various units			
No.	**Setting contents for PC link 0**	**No.1**	**No.2**	**No.3**	**No.4**
41	Link register range	128	128	128	128
44	Starting no. for link register transmission	0	40	80	0
45	Link register transmission size	40	40	48	0

When link areas are allocated as shown above, the No. 1 send area can be sent to the No. 2, No. 3 and No. 4 receive areas. Also, the No. 1 receive area can receive data from the No. 2 and No. 3 send areas. No. 4 is allocated as a receive area only, and can receive data from No. 1, No. 2, and No. 3, but cannot transmit it to other stations.

Using only a part of the link area

Link areas are available for PC link 0 and PC link 1, and 1,024 link relay points and 128 link register words can be used. This does not mean, however, that it is necessary to reserve the entire area. Parts of the area which have not been reserved can be used as internal relays and internal registers.

Example of link relay allocation

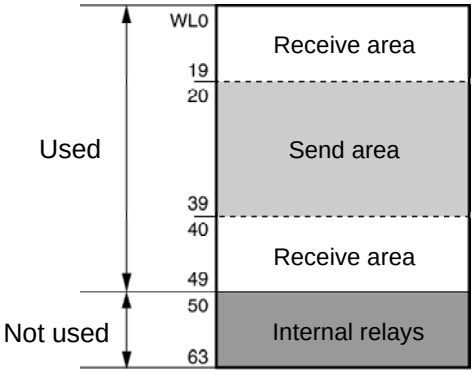

System register		Setting value
No.	**Setting contents for PC link 0**	
40	Link relay range	50
42	Starting no. for link relay transmission	20
43	Link relay transmission size	20

With the above setting, the 14 words (224 points) consisting of WL50 to 63 can be used as internal relays.

Example of link register allocation

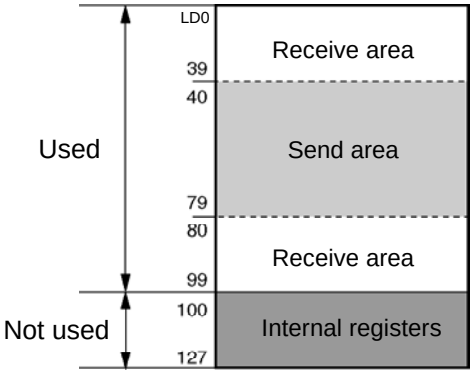

System register		Setting value
No.	**Setting contents for PC link 0**	
41	Link register range	100
44	Starting no. for link register transmission	40
45	Link register transmission size	40

With the above setting, the 28 words consisting of LD100 to 127 can be used as internal registers.

4.2.4 Sample PC Link Program

Condition

In this program, Y50 is output from Unit No. 2 when X10 is turned on by Unit No. 1, and Y60 is output from Unit No. 3 when X11 is turned on by Unit No. 1.

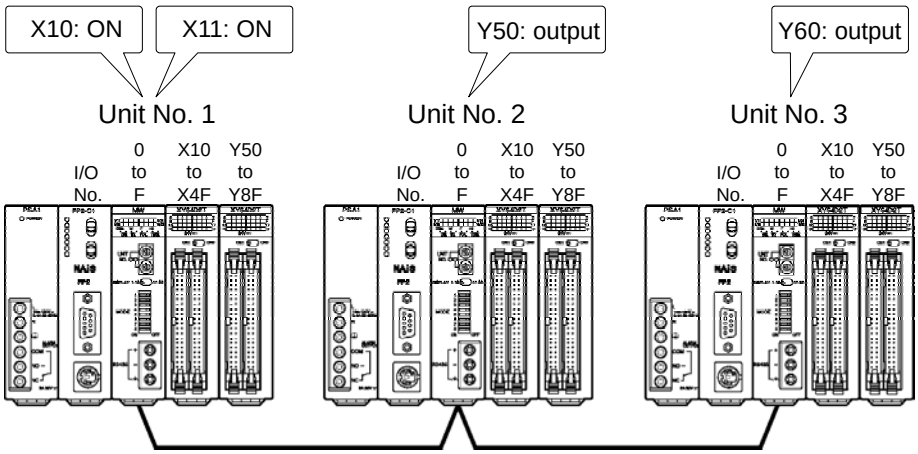

System register setting

System register		Settings for the various units		
No.	**Setting contents**	**No.1**	**No.2**	**No.3**
40	Link relay range	64	64	64
41	Link register range	128	128	128
42	Starting no. for link relay transmission	0	20	40
43	Link relay transmission size	20	20	24
44	Starting no. for link register transmission	0	40	80
45	Link register transmission size	40	40	48

Link relay allocation

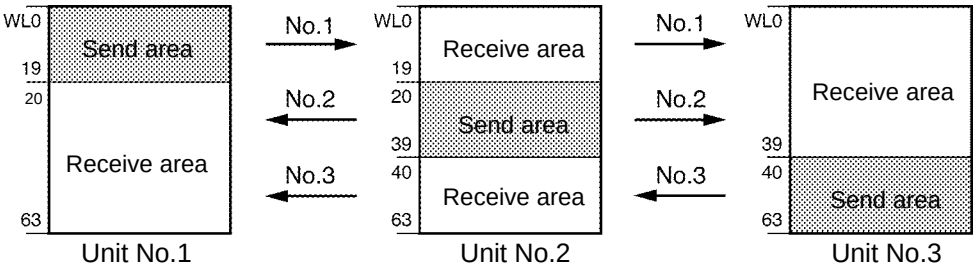

Link register allocation

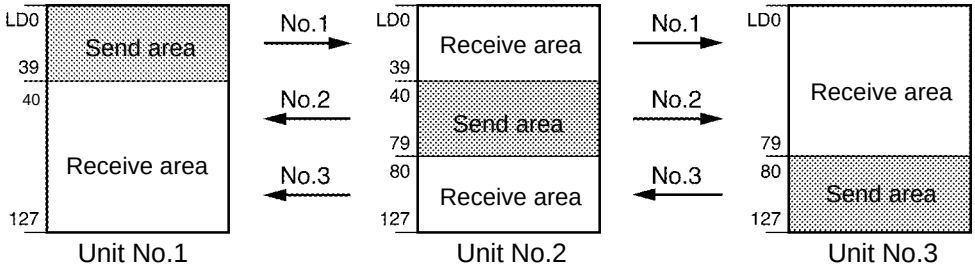

Program example

Unit No. 1 program

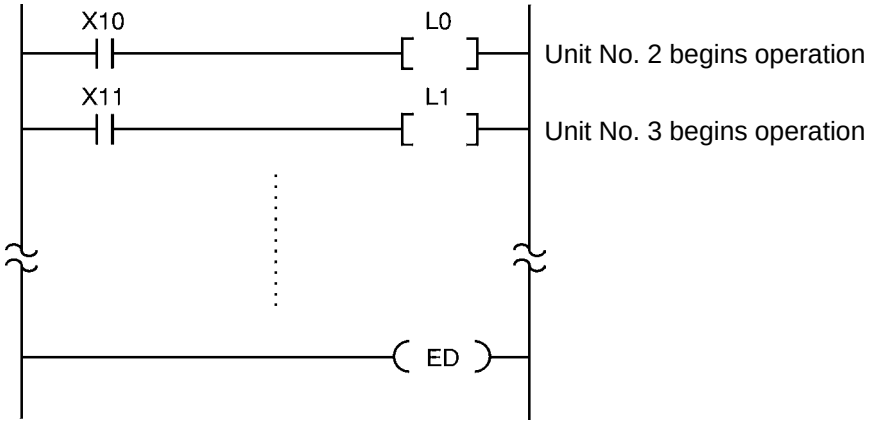

Unit No. 2 program

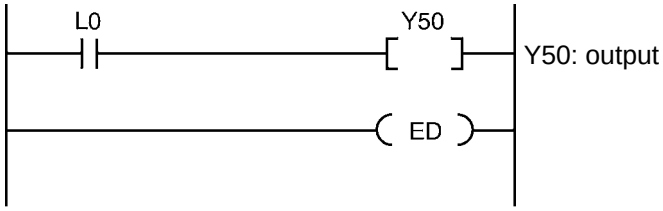

Unit No. 3 program

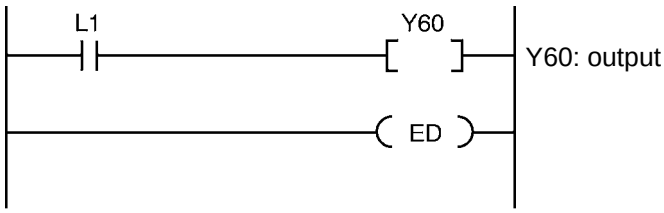

4.2.5 Precautions When Allocating Link Areas

If a mistake is made when allocating a link area, be aware that an error will result, and communication will be disabled.

Avoid overlapping send areas

When sending data from a send area to the receive area of another programmable controller, there must be a link relay and link register with the same number in the receive area on the receiving side. In the example shown below, there is an area between No. 2 and No. 3 which is overlapped, and this will cause an error, so that communication cannot be carried out (the ERR. LED will blink).

Example of link relay allocations

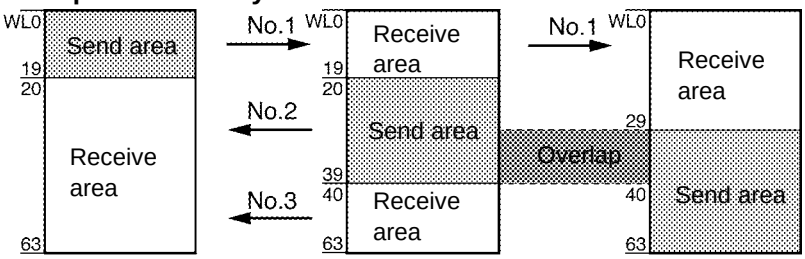

System register		Settings for the various units		
No.	**Setting contents for PC link 0**	**No.1**	**No.2**	**No.3**
40	Link relay range	64	64	64
42	Starting no. for link relay transmission	0	20	**30**
43	Link relay transmission size	20	**20**	34

Unallowable allocations

Allocations such as those shown below are not possible, either for link relays or link registers.

Allocations in which the send area is split

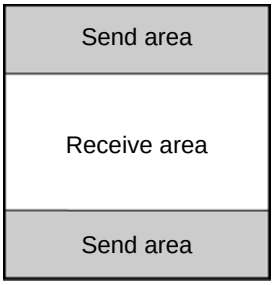

Allocations in which the send and receive areas are split into multiple segments

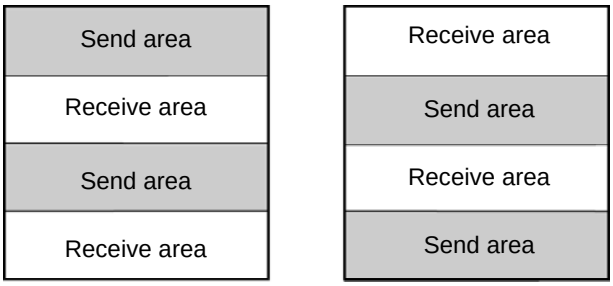

4.2 PC Link

Appendix A

What to Check If a Problem Occurs

A.1 If the CPU ERROR LED Lights . . . . . 5 - 3

A.2 Confirming the Mode Being Used . . . . . 5 - 4

A.3 What to Check When the ERR LED Is Lighted or Blinking . . . . . 5 - 5

A.4 What to Do If a Transmission Error Occurs . . 5 - 6

A.1 If the CPU ERROR LED Lights

Condition
The CPU ERROR LED is lighted.

Procedure 1
Check to see whether all of the units are corrected installed on the backplane.

Procedure 2
Check to see if the POWER LED on the power supply unit is lighted. If not, refer to the FP2 hardware manual (* Section 6.2.3).

Procedure 3
Check to see if the ALARM and ERROR LEDs on the CPU are lighted.

ALARM/ERROR LED status	What to do
ON	See chapter 6 of the FP2 hardware manual.
OFF	Check to see if the CPU is Ver. 1.05 or a subsequent version. This can be checked by looking at the side panel seal on the CPU or the NPST-GR.

A.2 Confirming the Mode Being Used

Procedure 1

To see if the mode being used is appropriate for the objective, check the mode selector switches (2) on the rear panel.

Mode	What to check	Mode selector switches(2)
MEWNET-W mode	Check to see if all of the units in the link are in the MEWNET-W mode. If the problem is not corrected, regardless of whether or not the units are in the MEWNET-W mode, see chapter 5 of the FP3/FP5 W type (wire) link system manual.	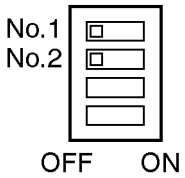
MEWNET-W2 mode	Check to see if all of the units in the link are in the MEWNET-W2 mode. If the problem is not corrected, regardless of whether or not the units are in the MEWNET-W2 mode, refer to MEWNET-W2 Wire Link Specification Explanations.	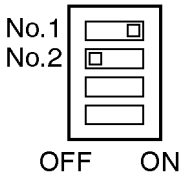
MEWNET-F mode	Check to see if all of the units in the link are in the MEWNET-F mode. If the problem is not corrected, regardless of whether or not the units are in the MEWNET-F mode, see chapter 8 of the FP3/FP5 Remote I/O system manual.	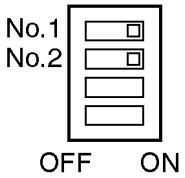

☞ **Note**

The setting of the mode selector switches (2) should be changed with the power off.

A.3 What to Check When the ERR LED Is Lighted or Blinking

Condition

The ERR LED of the FP2 Multi-wire link unit is lighted or blinking.

Procedure 1

If the ERR LED is lighted, turn the power off and then on again, several times.

Procedure 2

If the ERR LED is blinking, the procedure noted below may also be carried out.

Status	What to do
ERR LED blinking (intervals of approx. 1.0 seconds)	Check to make sure the CPU is Ver. 1.05 or a subsequent version. This can be checked by looking at the side panel seal on the CPU or the NPST-GR software status screen.
ERR LED is blinking (intervals of approx. 0.2 seconds), and COM LED is lighted.	Check the parameter settings program, and see if there are overlapping link area allocations. (If so, change one to a number in the link which is not being used, and which is allocated to that link area.) Check the parameter settings program, and see if there are overlapping unit numbers.
ERR LED is blinking (intervals of approx. 0.2 seconds), and COM LED is not lighted.	Check to see if all the unit numbers are in the range of 1 to 64, and re-boot.

If operation is not possible, regardless of whether or not the above items are correct, please contact your dealer. Also, if you have a spare link unit, replace the one being used with the spare unit and check the operation.

A.4 What to Do If a Transmission Error Occurs

Condition

A transmission error is occurring.

Procedure 1

Check to see if the communication cables have been securely connected to the transmission terminals of the various units, with positive (+) terminals connected to positive (+) terminals and negative (-) terminals to negative (-) terminals.

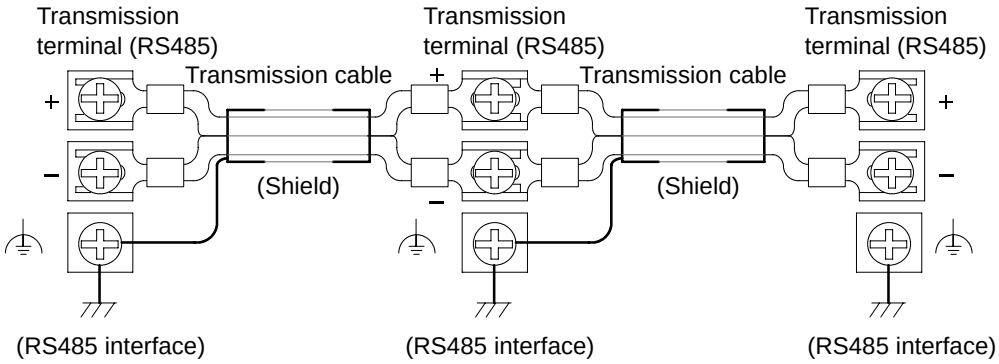

Procedure 2

Check to see if the transmission cables are within the specifications range, referring to FP2 Multi-wire Link Unit hardware manual Section 1.2.4.

At this point, make sure all of the cables in the link are of the same type, and that multiple types of cables are not being used.

☞ **next page**

Procedure 3

Check the status indicator LEDs and Nos. 7 and 8 of the mode setting switches (1) on the front panel to make sure the units at both ends of the network have been designated as terminal stations.

Mode selector switches (1)	
Set as terminal station	**Not set as terminal station**
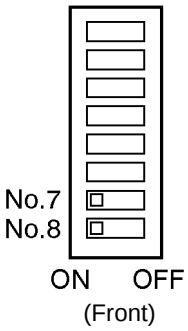	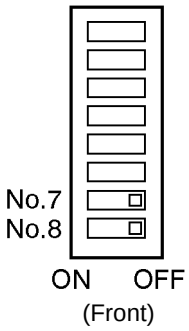

☞ **Note**

Do not designate any unit other than those at both ends of the network as a terminal station.

Procedure 4

When operating in conjunction with the W/W2 link mode, make sure link areas do not overlap those.

A.4 What to Do If a Transmission Error Occurs

Appendix B

Dimensions

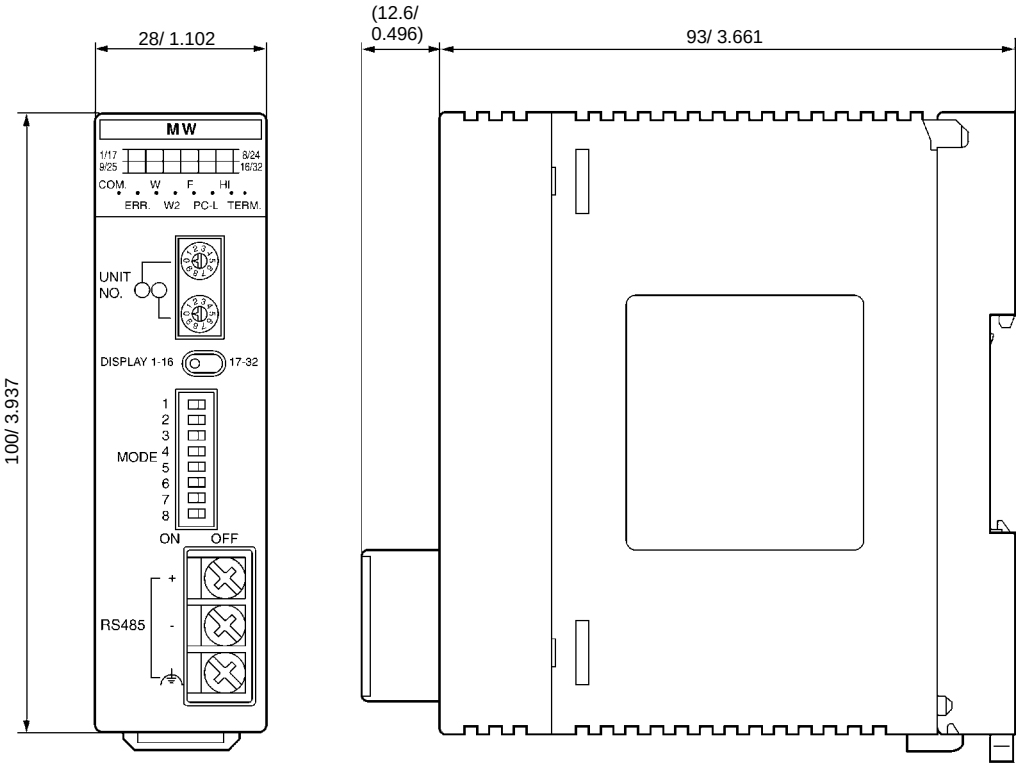
28/ 1.102
(12.6/
0.496)
93/ 3.661
100/ 3.937
MW
1/17
9/25
8/24
16/32
COM.
W
F
HI
ERR.
W2
PC-L
TERM.
UNIT
NO.
DISPLAY 1-16
17-32
MODE
1
2
3
4
5
6
7
8
ON
OFF
RS485
+
-

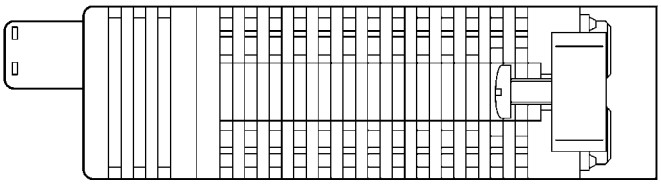

(unit: mm/in.)

Index

C

confirming, 1 - 16
crimp terminal, 3 - 4
current consumption, 1 - 16

D

data transfer function, 4 - 3

F

flags, A - 9

I

I/O allocations, 1 - 16

L

link area, 4 - 4, 4 - 5, 4 - 7
link areas, 4 - 10

M

MEWNET-F mode, 1 - 6
MEWNET-W mode, 1 - 4
MEWNET-W2 mode, 1 - 5
mode selector switches (1), 2 - 3, 2 - 8
mode selector switches (2), 2 - 4, 2 - 9
multi-wire link unit, 1 - 3

P

parts terminology, 2 - 3
PC link, 4 - 4, 4 - 8
PC link function, 4 - 3

R

remote programming function, 4 - 3
restrictions, 1 - 14

S

slave station number display selector switch, 2 - 3, 2 - 6
specifications, 1 - 8
station number selector, 2 - 3, 2 - 7
status indicator LEDs, 2 - 3, 2 - 5

T

transmission cable, 1 - 12
transmission cable wiring, 3 - 3

Record of changes

Manual No.	Date	Description of changes
ARCT1F302E/ ACG-M302E	JUN.1999	First edition
ARCT1F302E-1/ ACG-M302E-1	NOV.2006	Second edition
ARCT1F302E-2/ ACG-M302E-2	NOV.2008	Third edition - Change in Corporate name
ARCT1F302E-3	AUG.2011	Fourth edition - Change in Corporate name - Fixed Errors
ARCT1F302E-4	JUL.2013	Fifth edition - Change in Corporate name

Please contact .....

Panasonic Industrial Devices SUNX Co., Ltd.

■ Overseas Sales Division (Head Office): 2431-1 Ushiyama-cho, Kasugai-shi, Aichi, 486-0901, Japan
■ Telephone: +81-568-33-7861 ■ Facsimile: +81-568-33-8591
panasonic.net/id/pidsx/global

About our sale network, please visit our website.

© Panasonic Industrial Devices SUNX Co., Ltd. 2013

July, 2013 PRINTED IN JAPAN

ARCT1F302E-4