Panasonic

Technical Instructions (Overall)

MINAS-BL GV series

- Thank you very much for your purchase of Panasonic product.
- Please read this instruction manual carefully for proper use.
- In particular, be sure to read Safety precautions (P.2 to 5) before use for safety.
- Keep this manual with care after reading, and read as necessary.
- This product is for industrial equipment. Don't use this product at general household.

- Label of safety precaution is affixed to the product.

Be sure to give this Instruction manual to an end user.

<Contents>

	page
Safety precautions	2
Introduction	6
Checking the model	6
Name of part	8
Installation	9
Caution	11
System configuration and wiring	12
Wiring	14
Test run	18
Checking load and use condition	20
Assembling of gear head	22
Maintenance/ inspections	23
Protective functions	24
How to clear trip	26
Troubleshooting	27
How to use Digital key pad (option)	28
Operating instruction	30
Test run (Digital key pad)	31
How to copy parameter	34
List of parameters (Default)	37
LED display	41
The function of parameters	42
Outline of PANATERM for BL	52
Example of operation pattern	52
Communication	53
Conformance to EC directive and UL standard	80
Specifications	84
Options	90
List of peripheral equipments	96
Cautions for proper use	99
After-sale service (Repair)	Back cover

Safety precautions Important

The following explanations are for things that must be observed in order to prevent harm to people and damage to property.

- Misuses that could result in harm or damage are shown as follows, classified according to the degree of potential harm or damage.

⚠ **Danger**	Indicates great possibility of death or serious injury.
⚠ **Caution**	Indicates the possibility of injury or property damage.

- The following indications show things that must be observed.

⃠	Indicates something that must not be done.
❗	Indicates something that must be done.

⚠ DANGER

Do not touch the rotating part of the motor while operating.

⃠ The failure could result in injuries.

Do not touch the motor, amplifier, and external regenerative resistor, since they become hot.

⃠ The failure could result in burns.

Do not expose the cables to sharp objects, excessive pressing or pinching forces, and heavy loads.

⃠ The failure could result in electric shocks, damages, or malfunction.

Do not subject the product to water, corrosive or flammable gases, and combustibles.

⃠ The failure could result in fire.

Do not climb or stand on the brushless equipment.

⃠ The failure could result in electric shocks, injuries, damages, or malfunction.

Do not place inflammable matter near the motor, amplifier and external regenerative resistor.

⃠ The failure could result in fire.

Ground the earth of the brushless motor and brushless amplifier.

❗ The failure could result in electric shocks.

Install an external emergency stop device to shut down the main power source in any emergency.

❗ The failure could result in electric shocks, injuries, fire, damages or malfunction.

Make sure to secure the safety after the earthquake.

❗ The failure could result in electric shocks, injuries, or fire.

Mount the brushless motor, brushless amplifier and external regenerative resistor on incombustible material such as metal.

❗ The failure could result in electric shocks, injuries, or fire.

Do not put your hands in the brushless amplifier.

⃠ The failure could result in burns, or electric shocks.

Do not connect the cable (U, V and W) of the brushless motor directly to the commercial power source.

⃠ The failure could result in fire, malfunction or damage.

An over-current protection, earth leakage breaker, over temperature protecter and emergency stop device must be installed.

❗ The failure could result in electric shocks, injuries, or fire.

Install the product properly to avoid personal accidents or fire in case of an earthquake.

❗ The failure could result in electric shocks, injuries, or fire.

Only persons who are trained and qualified to work with or on electrical equipment are permitted to operate or maintain this equipment.

❗ The failure could result in electric shocks.

Safety precautions Important

Transportation, wiring and checking must be performed with power source turned off and after making sure that there is no risk of electric shock.

The failure could result in electric shocks or injuries.

Arrange the phase sequense of the motor and wiring of the CS sensor.

The failure could result in injuries, damages, or malfunction.

⚠ CAUTION

Do not approach to the equipment after recovery from the power failure because they may restart suddenly.

The failure could result in injuries.

Do not drive the motor from the external power.

The failure could result in fire.

Do not hold the cables or motor shaft when transporting the motor.

The failure could result in injuries.

Never start and stop the motor by magnet contactor which is provide on the main line.

The failure could result in damages.

Do not frequently turn on and off the master power source.

The failure could result in malfunction.

Do not place any obstacle that blocks ventilation around the brushless amplifier and the motor.

The failure could result in burns or fire.

Do not subject the brushless amplifier, motor or shaft to high impact.

The failure could result in malfunction.

Do not block the heat dissipation hole.

The failure could result in electric shocks, or fire.

Do not modify, dismantle or repair the product.

The failure could result in electric shocks, injuries, or fire.

Be sure to turn off power when not using it for a prolonged time.

The failure could result in injuries due to unintentional operation.

If trip occurs, remove the causes of the trip and secure the safety before restarting.

The failure could result in injuries.

Maintenance and check must be performed by an expert.

The failure could result in injuries and electric shock.

Execute the trial-operations with the motor fixed and a load unconnected.
Connect a load to the motor after the successful trial-operations.

The failure could result in injuries.

Conduct proper installation according to product weight or rated output.

The failure could result in injuries, or damages.

Use the specified voltage on the product.

The failure could result in electric shocks, injuries, or fire.

Use the motor and amplifier with the specified combination.

The failure could result in fire.

Install a safety device against idling or locking of gear head, and leakage of grease.

The failure could result in injuries, damages, and contaminations.

Ambient temperature of installed motor and amplifier should be under permittable one.

The failure could result in damages.

This product should be treated as an industrial waste when it is disposed.

Introduction/ Checking the model

After unpacking

- Make sure that the model is what you have ordered.
- Check whether the product has been damaged or not during transportation.

If any deficiency should be found,
contact the dealer store where you bought this product.

Checking the model of Amplifier, Motor and Gear head

This amplifier is designed for use in combination with a motor to be specified by us.
Check a name of series, rated output, voltage specifications you wish to use
You must not use any other combinations than those listed below:

Standard

Shaft type	Voltage	Out put	Amplifier Type	Applicable Motor	Applicable Gear head
Pinion shaft	Single phase AC100 to 120 V	50 W	MBEG5A1BCV	MBMU5AZAX	MX8G □ B * Reduction ratio: 3 to 180
		90 W	MBEG9A1BCV	MBMU9A1AZ	MZ9G □ B * MY9G □ B * Reduction ratio: 3 to 200
		130 W	MBEG1E1BCV	MBMU1E1AZ	
	Single phase/ 3-phase AC200 to 240 V	50 W	MBEG5A5BCV	MBMU5AZAX	MX8G □ B * Reduction ratio: 3 to 180
		90 W	MBEG9A5BCV	MBMU9A2AZ	MZ9G □ B * MY9G □ B * Reduction ratio: 3 to 200
		130 W	MBEG1E5BCV	MBMU1E2AZ	
Round shaft	Single phase AC100 to 120 V	50 W	MBEG5A1BCV	MBMU5AZAS	—
		90 W	MBEG9A1BCV	MBMU9A1AS	
		130 W	MBEG1E1BCV	MBMU1E1AS	
	Single phase/ 3-phase AC200 to 240 V	50 W	MBEG5A5BCV	MBMU5AZAS	
		90 W	MBEG9A5BCV	MBMU9A2AS	
		130 W	MBEG1E5BCV	MBMU1E2AS	

* A figure representing reduction ration in □
e.g.) Part number of MX type gear head with reduction ratio 10 is MX8G10B.

For special-purpose motor

Voltage	Out put	Amplifier Type	Applicable Motor
Single phase AC100 to 120 V	50 W	MBEG5A1BCV	MBMU5AZA ○ *
	90 W	MBEG9A1BCV	MBMU9A1A ○ *
	130 W	MBEG1E1BCV	MBMU1E1A ○ *
Single phase/ 3-phase AC200 to 240 V	50 W	MBEG5A5BCV	MBMU5AZA ○ *
	90 W	MBEG9A5BCV	MBMU9A2A ○ *
	130 W	MBEG1E5BCV	MBMU1E2A ○ *

The mark " ○ " following the motor model number indicates the motor shaft specification.

Checking the model

Checking the model of brushless motor

Nameplate

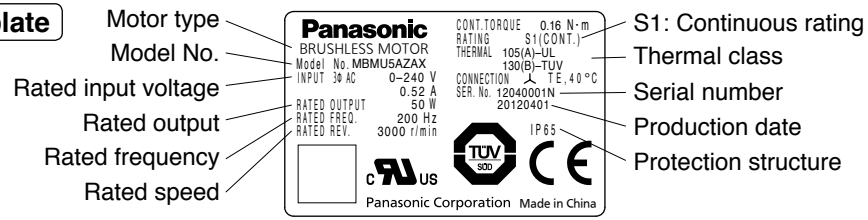

Model designation

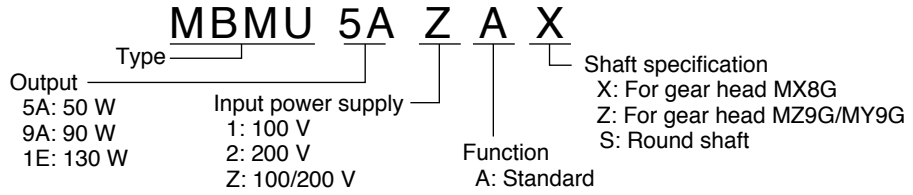

Serial number

Example) Ser. No. 12 04 0001 ∗

- 12: Year of production (Lower 2 digits of AD year)
- 04: Month of production
- 0001: Consecutive number

The motor manufactured in Apr. 2012 is given the Serial number 0001.

Production date

Example) 2012 04 01

- 2012: Year of production (AD year)
- 04: Month of production
- 01: Day of production

Checking the model of brushless amplifier

Nameplate

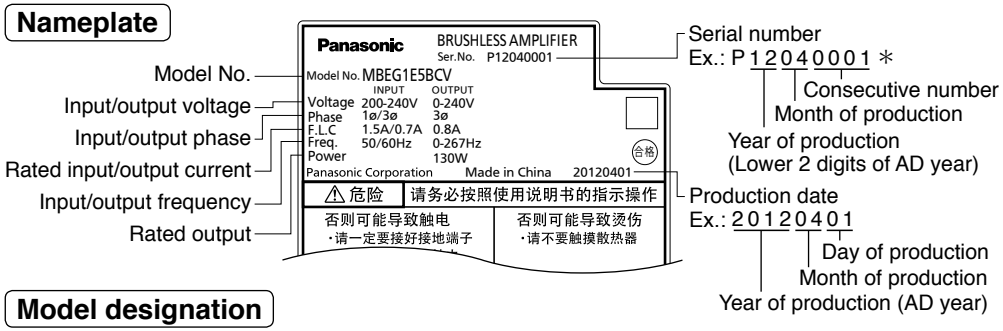

Model designation

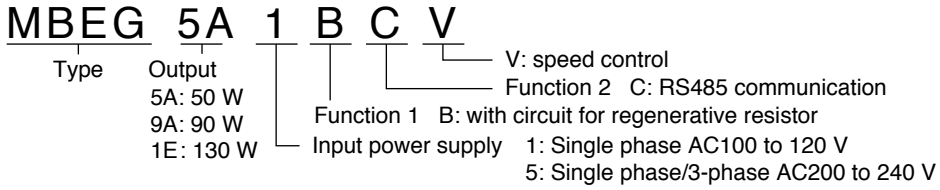

Name of part

Name of part

Brushless motor

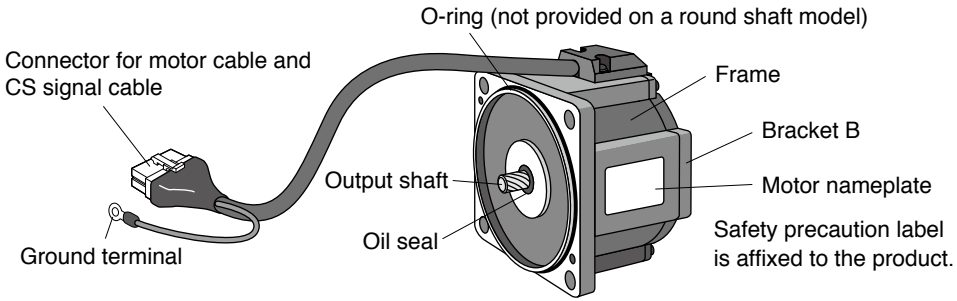

Brushless amplifier

[Front view]

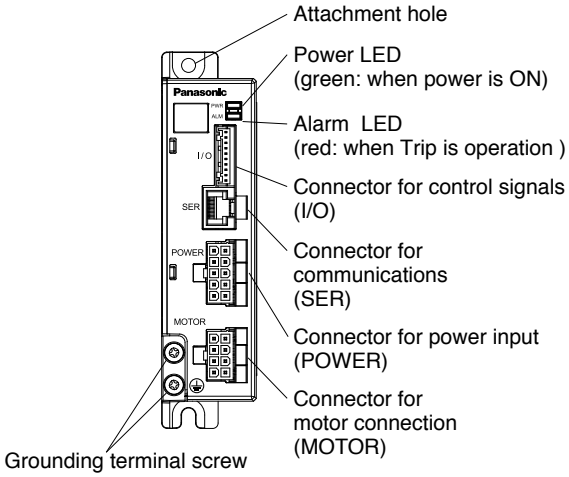

[Side view]

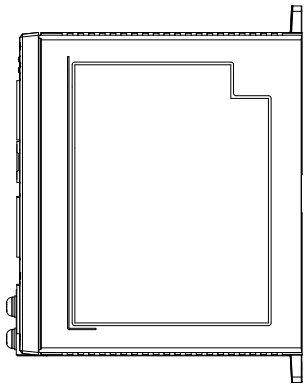

Safety precaution label
is affixed to the product.

Installation

Install the brushless motor and brushless amplifier properly for preventing failure and accident.

Transport

- Use caution enough in transporting the unit to prevent injury by drop or fall, and avoid damage to the equipment.

Storage

- Keep the unit indoors in a clean and dry place free from vibration with little change of temperature.
- In keeping a gear head alone, direct the output shaft down.
  (Otherwise, grease leaking is possible.)

Location

- Location gives great influence upon the life of brushless motor and brushless amplifier, therefore choose a place in conformance with the conditions below:
  (1) Indoors where the motor is not subjected to rain water and direct sun beam.
  (2) Do not use the motor in corrosive atmosphere such as hydrogen sulfide, sulfurous acid, chlorine, ammonia, sulfur, gas chloride, gas sulfide, acid, alkali, and salt, in the atmosphere of combustible gas, or in the vicinity of flammables.
  (3) Place not exposed to grinding liquid, oil mist, iron powder, and cutting particle.
  (4) Well-ventilated place with little moisture, oil, or inundation, and place far from heat source such as a furnace.
  (5) Place easy to check and clean
  (6) Place free from vibration
  (7) Do not use the unit in an enclosed environment. Enclosing may raise the temperature of motor (amplifier), and shorten their life.

Caution in installing gear head

Install a device that will ensure safety operation of the system even if the following failures should occur on the life end of gear head: idling by damaged teeth, locking by bite, grease leakage, and the like.

- As for application such as on a lifter or the like device, install a device for preventing drop by damaged teeth.
- As for application such as opening and closing of door, install a release device against locking by gear biting.
- As for food or textile equipment, install an oil pan for measures against grease leakage.
- Do not install an encoder, sensor, contact, etc., in the proximity of gear head. Or otherwise, protect such devices against grease leakage.
- In order to prevent unexpected accident, be sure to perform daily check.

Installation

Environmental condition

Item		Condition
Ambient temperature	Brushless motor	–10 °C to 40 °C (free from freezing) *1
	Brushless amplifier	0 °C to 50 °C (free from freezing) *1
	Digital key pad (Option)	
Ambient humidity		20% to 85% RH or below (free from condensation)
Storage temperature		At normal temperature and normal humidity *2
Protection structure	Brushless motor	IP65 (Excluding shaft pass-through section and lead wire connector) • This motor meets test requirements specified in EN standards (EN60529 and EN60034-5). This motor cannot be used for an application that requires long term waterproof performance, such as the case where the motor is always washed with water.
	Brushless amplifier	Equivalent to IP20
	Digital key pad (Option)	
Vibration		Not greater than 4.9 m/s^2 (10 to 60 Hz)
Altitude		Not greater than 1000 m

*1 Ambient temperature is measured at a distance of 5 cm from the product.

*2 Temperature which is acceptable for a short time, such as during transportation, is –20 °C to 60 °C (free from freezing).

Installation of brushless motor

• **Oil and water protection**

(1) Direct down the lead of cable as far as possible.

(2) Avoid use in such an environment where the motor is always exposed to oil and water.

(3) Avoid use with cable immersed in oil or water.

• **Stress to cable**

(1) Make sure that stress is not applied to the lead or connection of cable due to bending or dead weight.

(2) In installation where the motor moves, fix the cable of motor, and house the extension cable connected to it in the cable bear to reduce stress by bending as small as possible.

(3) Allow the bending radius of cable as large as possible.

Installation/ Caution

Installation of brushless amplifier

The amplifier is a vertical placement type. Install it vertically and provide at least 10 cm space around it for ventilation.

(1) When installing with screw

Determine the fastening torque of the fixing screw based on the strength of the screw and material of the mounting surface, to ensure secure and safe installation.

Example) To install to steel plate with steel screw (M4):
1.35 to 1.65 N·m

(2) When installing to DIN rail

The DIN rail mounting unit is available as option.
For details, refer to P.94.

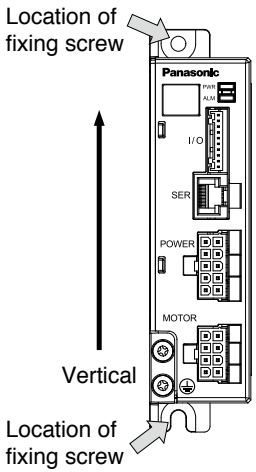

Cautions for Proper Use

(1) Because the control circuit is sensitive to temperature and impact, read this instruction manual carefully for proper installation.

(2) The brushless amplifier switches the power element at a high speed to control the motor. When the motor runs, leaking current will increase, which may activate the leakage breaker. If this is the case, use a leakage breaker provided with measure against high frequency for inverter.

(3) In starting and stopping the motor, use the operation instruction input "I1" or RUN/STOP switch on Console A or Digital key pad. If the motor is turned on/off by turning on/off of power supply, the life of internal circuit may be shortened.

System configuration/ general wiring diagram

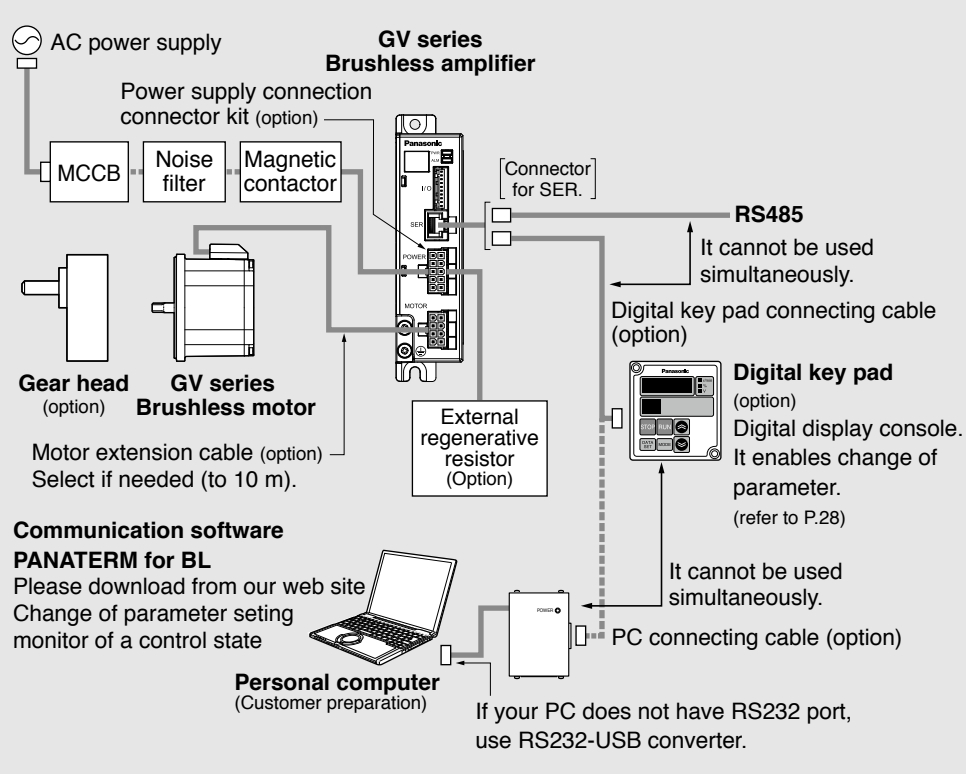

- Wiring work shall be performed by qualified electric engineering technician.
- Do not turn on power before finishing wiring, to avoid risk of electric shock.
- For details of options (sold separately), see P.90.

Wiring equipment

- Recommended noise filter

Voltage	Optional part number (option)	Manufacturer's part No.	Manufacturer
Single phase 100, 200 V	DV0P4170	SUP-EK5-ER-6	OKAYA ELECTRIC IND. CO., LTD.
3-phase	DV0PM20042	3SUP-HU10-ER-6	

- Selection of Molded Case Circuit Breaker (MCCB), magnetic contactor, and electric wire (wiring within equipment) (refer to P.80 “Conformance to EC directive and UL standard” for compatibility with overseas standard.)

Voltage	Capacity (W)	MCCB (rated current)	Magnetic contactor rated current (contact structure)	Electric wire (mm^2) (Wiring within equipment)	
				Main circuit/ Grounding wire	Control circuit
Single phase 100V	50 to 130	5 A	20 A (3P+1a)	0.5 (AWG20)	0.13 (AWG26)
Single phase 200V	50 to 130	5 A	20 A (3P+1a)	0.5 (AWG20)	0.13 (AWG26)
3-phase 200V	50 to 130	5 A	20 A (3P+1a)	0.5 (AWG20)	0.13 (AWG26)

■ **Be sure to ground the grounding terminal.**

In wiring to power supply (outside of equipment) from MCCB, use an electric wire of 1.6 mm diameter (2.0 mm^2) or more both for main circuit and grounding. Apply grounding class D (100 Ω or below) for grounding. Do not tighten the ground wires together, please tighten them individually.

- **Selection of relay**

  As for use for control circuit such as control input terminal, use a relay for small signal (minimum guarantee current 1 mA or less) for preventing poor contact.

  <Reference example>

  Panasonic: DS type, NK type, HC type, OMRON: G2A type

- **Control Circuit Switch**

  When using a switch instead of relay, use one for minute current in order to prevent poor contact.

  <Example>

  Nihon Kaiheiki Ind.Co.,Ltd: M-2012J-G

Wiring

Standard wiring diagram

• **In case of 3-Phase 200 V**

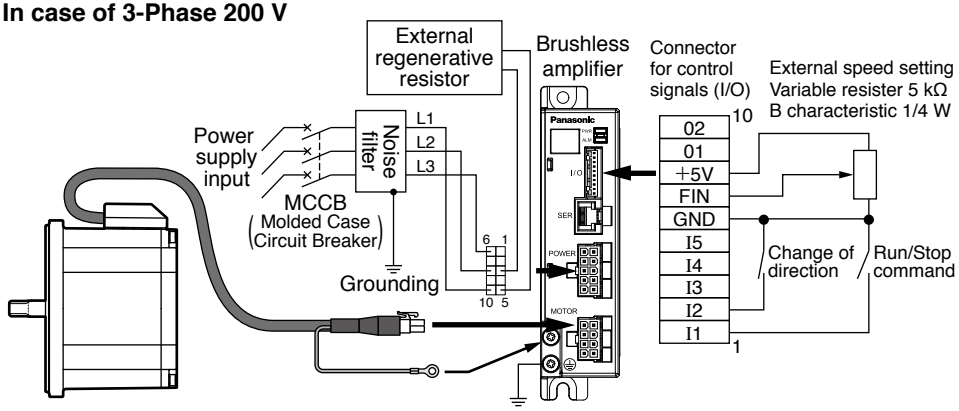

Be sure to ground the grounding terminal.

In wiring to power supply (outside of equipment) from MCCB, use an electric wire of 1.6 mm diameter (2.0 mm^2) or more both for main circuit and grounding.
Apply grounding class D (100 Ω or below) for grounding.
Do not tighten the ground wires together, but connect them individually.
Fastening torque of earth screws to be 0.49 to 0.98 N·m.

• **In case of single phase 100, 200 V**

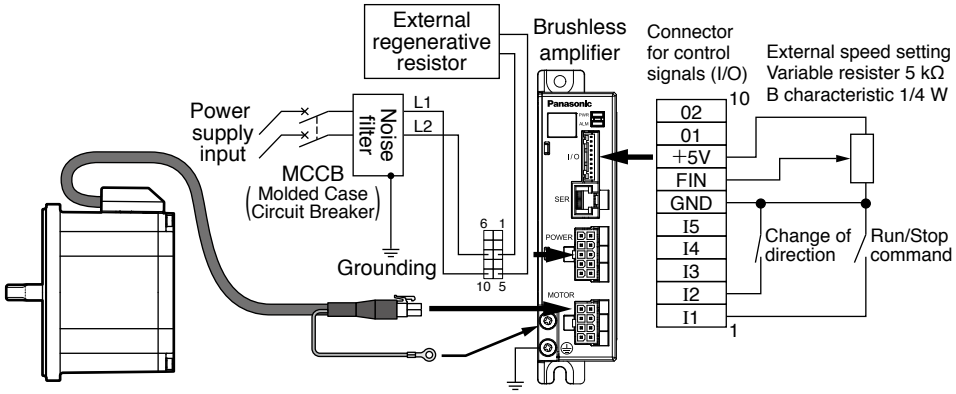

Be sure to ground the grounding terminal.

In wiring to power supply (outside of equipment) from MCCB, use an electric wire of 1.6 mm diameter (2.0 mm^2) or more both for main circuit and grounding.
Apply grounding class D (100 Ω or below) for grounding.
Do not tighten the ground wires together, but connect them individually.
Fastening torque of earth screws to be 0.49 to 0.98 N·m.

Function of terminal

Connector for power supply (POWER)

Connector on amplifier side: Part No. 5569-10A1-210 (Molex Inc.) or equivalent.
(mating connector: Housing 5557-10R-210, Terminal 5556PBTL)

Terminal number	Terminal symbol	Terminal name	Terminal explanation
3	B	Terminal for external regenerative resistor	Please connect external regenerative resistor of an option if needed. External regenerative resistor name: 100 V type DV0P2890 (50 Ω) 200 V type DV0PM20068 (200 Ω)
5	P		
6	L3	Terminal for power supply input	Connect the terminal to commercial power supply conforming to voltage specification. When you use single phase, connect the main power between L1 and L2 terminals.
8	L2		
10	L1		
1,2,4,7,9	NC	—	Do not connect anything.

Wiring

Connector for control signals (I/O)

Connector on amplifier side: Parts No. S10B-PASK-2 (J.S.TMfg.,Co.,Ltd.) or equivalent.
(mating connector: Housing PAP-10V-S, Terminal SPHD-001T-P05)

Terminal number	Terminal symbol	Terminal name	Terminal explanation
1	I1*1	Signal input 1	Operation instruction input *1 Motor runs when " I1" and "GND" are shorted, and stops when they are opened.
2	I2*1	Signal input 2	Rotation changeover input *1 CW operation when " I2" and "GND" are shorted, and CCW operation when they are opened. *2
3	I3*1	Signal input 3	Free-run stop input *1 Free-run stop when " I3" and "GND" are shorted,
4	I4*1	Signal input 4	Trip reset input *1 cancels a trip state when " I4" and "GND" are shorted,
5	I5*1	Signal input 5	Free-run stop input *1 Free-run stop when " I5" and "GND" are shorted,
6	GND*3	Signal ground	Common ground of analog speed input and input/output signal *3
7	FIN	For speed setting Input	Speed can be set by applying voltage DC0 to 5 V. Input impedance 100 kΩ.
8	+5V	The power supply for external speed setting	Power output dedicated when connecting an external variable resistor (5 kΩ, B characteristics) to FIN input (cannot be used for any other purpose.)
9	01*1	Signal output 1	Trip signal output. *1 "L" in trip (Contact ON) Open collector Vce max: DC30 V, Ic max: 50 mA
10	02*1	Signal output 2	Velocity pulse output. *1 (24 pulses / 1 rotation) Open collector Vce max; DC 30 V, Ic max; 50 mA

*1 Function of input/output can be changed by the Digital key pad or PANATERM for BL. Default is shown. Please refer to The function of parameters of P.42.

*2 Rotation direction is that on motor shaft. When gear head is incorporated, the rotation direction of motor and that of gear output shaft are reversed for some gear reduction ratio. Please refer to the table of the permissible torque of P.20.
(CW: Rotation clockwise when see from the motor shaft, CCW: Rotation counterclockwise when see from the motor shaft)

*3 When resistor and control GND are disconnected in use of external variable resistor, 5 V is input to FIN irrespective of setting of variable resistor, and upper speed limit is directed; therefore use caution enough for connecting GND.

- The terminal number of the connector for control signals, pin No.1 is the SER connector side.
- Connector for connection J.S.TMfg.,Co.,Ltd. Housing: PAP-10 V-S Terminal: SPHD-001 T-P05
- When a control signal line is extended, please give as below 5 m.

Input circuit

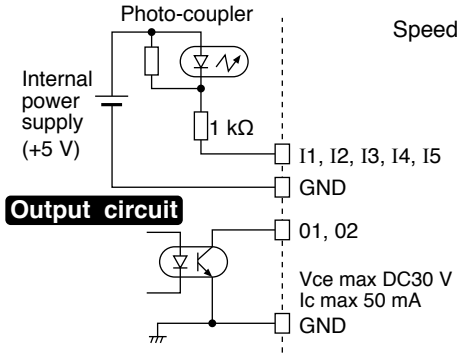

FIN characteristic

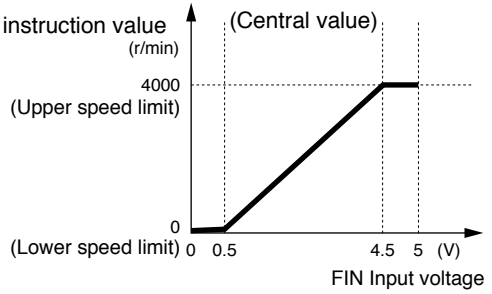

Connector for motor connection (MOTOR)

Connector on amplifier side: Parts No. 5569-08A1-210 (Molex Inc.) or equivalent.
(mating connector: Housing 5557-08R-210, Terminal 5556PBTL)

Terminal number	Terminal symbol	Terminal name	Terminal explanation
1	U	Motor U phase	Connect motor wire U, V and W.
2	V	Motor V phase	
3	W	Motor W phase	
4	5VS	High voltage 5 V	Not isolated from commercial power source. Use care to avoid electric shock and grounding fault.
5	CS1	CS signal 1	
6	CS2	CS signal 2	
7	CS3	CS signal 3	
8	GNDS	High voltage GND	

- High voltage is applied to motor wire and CS signal line; Use caution for avoiding electric shock.
- Use a motor extension cable (option) for extending motor wire.

Connector for communications (SER)

Modular jack: 85503-0001 (Molex Inc.) or equivalent (RJ45)

Terminal number	Terminal symbol	Terminal explanation
1	—	Do not connect anything.
2	+5V	DC5 V power supply for Digital key pad
3	SOT	Interface for Digital key pad or PANATERM for BL
4	SIN	
5	RS485+	For connect RS485+
6	RS485–	For connest RS485–
7	GND	Power supply GNG for Digital key pad
8	SCK	Interface for Digital key pad

- Connection of Digital key pad of an option is possible.
  Digital key pad connecting cable of an option (DV0P383**) is required.
- The terminal number of a modular jack is the right figure

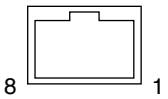

Test run

Inspection prior to test run/Test run

Inspection prior to test run

After completion of installation and wiring, check the connections and supplies as shown below:

(1) Make sure that all wiring is correct.
- Power input terminal: Check of connection L1, L2, L3
- Check of connection of a motor connector

(2) Make sure that input power supply conforms to rating.

Test run

• Operation with external control signal

When power is turned on, the power LED lights in green.
Upon tripping, the alarm LED lights in red.
The motor runs when the operation instruction input "I1" is short-circuited to "GND" and stops when the circuit between "I1" and "GND" is disconnected.
Rotating direction: CW when the rotation direction changeover instruction input "I2" is shorted to "GND", and CCW when "I2" is disconnected from "GND".

[CW : clockwise when viewed from motor shaft
CCW : counterclockwise when viewed from motor shaft]

If the rotation direction is reversed while the motor is running, the rapid directional switching can cause tripping due to the inertia of load.
When using a relay or switch for short-circuiting, select a minute electric current type (minimum guaranteed current 1 mA or below).

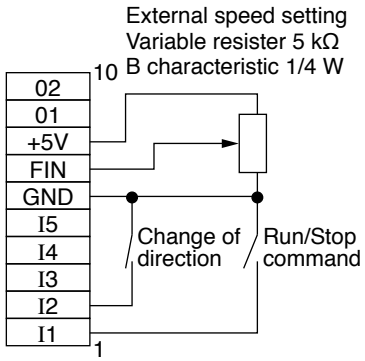

Rotating speed of default setting can be adjusted by using the analog speed instruction input to the speed setting input terminal "FIN".
For a prolonged shutdown, turn off power to the motor.

- When power is turned off and on again while operation instruction "I1" is short-circuited to "GND", the motor will start again, which is dangerous. Make sure that the circuit between "I1" and "GND" is open before turning on power.
- When gear head is incorporated, the rotation direction of motor and that of gear output shaft are reversed for some gear reduction ratio. Please refer to the table of the permissible axis torque (P.20).

• With Console A

To start the motor, set RUN/STOP switch to RUN position, and to stop the motor, set the switch back to STOP position.
Rotating direction can be switched from the direction selector switch on the side of Console A.
If the rotation direction is reversed while the motor in the RUN mode, the rapid directional switching can cause tripping due to the inertia of load.
Rotation speed can be adjusted by the speed potentiometer.
Turn off power when the motor is to be stopped for a long time.

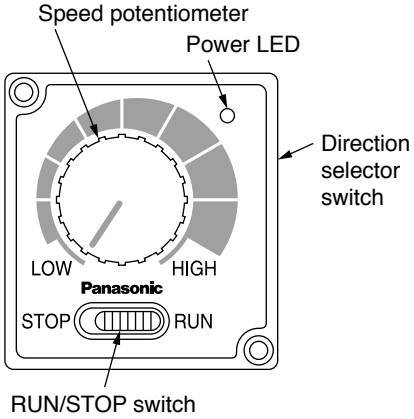

- When power is turned off with RUN/STOP switch in RUN position, and turned on again, the motor will start again, which is dangerous. When turning on power, always make sure that the switch is in STOP position.
- For connection to Consol A, use optional Consol A connecting cable. (option)
- The procedure descried above is for operation according to factory default. Different procedure is required if internal parameters have been changed by using the Digital key pad. Return the required settings (Parameters **30**, **31**, **33**, etc.) back to the factory default or initialize the parameters (Parameter **54**).
  Note that when a parameter is initialized, all other parameters are also reset to the factory default.

<Connections on Consol A and I/O connector>

I/O connector side Terminal No.	Terminal symbol	Lead color of a cable	Console A side terminal No.
1	I1	Brown	1
2	I2	Red	2
3	I3		—
4	I4		—
5	I5		—
6	GND	Orange	3
7	FIN	Yellow	4
8	+5V	Green	5
9	01		—
10	02		—

• Test run (Digital key pad)

Please refer toTest run (Digital key pad) (P.31).

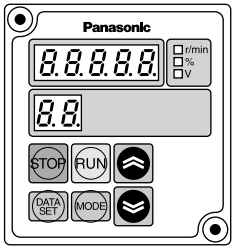

Digital key pad

Checking load and use condition

Check the use condition for extended use of the product. Particular use conditions may lead to heating or damage to the shaft. Fully check use conditions, and use the motor in a permissible range.

Standard life

Standard life is 5,000 hours for the motor equipped with gear head. Standard life of the motor without gear head (round shaft) is 10,000 hours (however, effective life of the oil seal is 5,000 hours).
Standard life is the designed lifetime predicted based on assumption that it is operated 8 hours/day (service factor: Sf = 1.0) under uniform loading (gear head allowable shaft torque, motor rated torque) at normal temperature and humidity.

Typical motor life can be determined as follows:

Example: Motor speed 3000 to 4000 r/min

Standard life (hours) = 5000 (hours) × 3000 (r/min) / operating speed (r/min)

Service factor (Sf)

$$\text{Life expectancy} = \frac{\text{Standard life}}{\text{Service factor (Sf)}}$$

Service factor (Sf) varies with impact of load and operation time. The table below shows how the service factor value depends on load condition.

Type of load	Typical load	Service factor		
		5 hours/day	8hours/day	24hours/day
Constant	Belt conveyor, One-directional rotation	1.0	1.0	1.5
Light-impact	Start/Stop, Cam-drive	1.2	1.5	2.0
Medium-impact	Instant FWD/REV, Instant stop	1.5	2.0	2.5
Heavy-impact	Frequent medium-impact	2.0 to 2.5	2.5 to 3.0	3.0 to 3.5

Permissible torque

The required gear head allowable shaft torque T_A can be determined based on the service factor and actual load torque T_1.

$T_A = T_1 \times Sf$

Select a gear head/motor so that the required torque (continuous value) is equal to or lower than the allowable shaft torque shown in the table below. In any condition, torque T_1 is not allowed to exceed the allowable shaft torque T_A regardless of Sf.

• Motor rotation speed: 3000 r/min or less. Unit: N·m

Model name	Reduction ratio	3	3.6	5	6	7.5	9	10	12.5	15	18	20	25	30	36	50	60	75	90	100	120	150	180	200
MBMU5AZAX MX8G□B		0.39	0.46	0.64	0.77	0.96	1.16	1.29	1.61	1.92	2.33	2.59	3.23	3.61	4.33	5.93	7.29	7.84						–
MBMU9A□AZ MZ9G□B MY9G□B		0.67	0.81	1.12	1.34	1.69	2.02	2.28	2.54	3.06	3.72	4.11	5.27	6.22	6.96	9.81	11.7	14.7	17.3	19.0	19.6			
MBMU1E□AZ MZ9G□B MY9G□B		1.01	1.21	1.69	2.02	2.54	3.04	3.42	3.82	4.59	5.58	6.17	7.91	9.34	10.5	14.7	17.5	19.6						

• Motor rotation speed: 3000 to 4000 r/min or less. Unit: N·m

Model name	Reduction ratio	3	3.6	5	6	7.5	9	10	12.5	15	18	20	25	30	36	50	60	75	90	100	120	150	180	200
MBMU5AZAX MX8G□B		0.29	0.35	0.48	0.58	0.72	0.87	0.97	1.21	1.44	1.75	1.94	2.42	2.71	3.25	4.45	5.47	6.84	7.48					–
MBMU9A□AZ MZ9G□B MY9G□B		0.50	0.61	0.84	1.01	1.27	1.52	1.71	1.91	2.30	2.79	3.08	3.95	4.67	5.22	7.36	8.78	11.0	13.0	14.3	17.0	19.6		
MBMU1E1AZ (100 V) MZ9G□B MY9G□B		0.59	0.71	0.99	1.18	1.49	1.78	2.00	2.24	2.69	3.27	3.61	4.63	5.47	6.15	8.60	10.2	12.9	15.4	17.2	19.6			
MBMU1E2AZ (200 V) MZ9G□B MY9G□B		0.76	0.91	1.27	1.52	1.91	2.28	2.57	2.87	3.44	4.19	4.63	5.93	7.01	7.88	11.0	13.1	16.5	19.6					

* Direction of rotation: ▭ represents that the direction is same as that of motor; otherwise opposite to that of motor

Shaft permissible load

The load should not cause the limits shown in the table below to be exceeded.

	Model name	Permissible overhung load (W)	Permissible thrust load (F)
Motor shaft	MBMU5AZAS	100 N	10 N
	MBMU9A □ AS	120 N	20 N
	MBMU1E □ AS	150 N	20 N
Gear shaft	MX8G type	294 N	49 N
	MZ9G type MY9G type	588 N	147 N

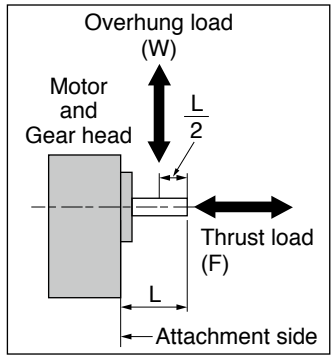

Permissible load inertia moment

When acceleration/deceleration time is set to 0.3 sec (initial setting),

The allowable load inertia moment should be kept within the value shown in the table below. (Allowable value for round shaft is applicable when free-run stop is activated. In the deceleration-to-stop mode, 1/4 of value shown in the table is applicable only to round shaft because of regeneration. If it is impossible to reduce inertial, extend the deceleration time or use optional external regenerative resistor.)

Unit: $\times 10^{-4}$kg·m²

Model name	Reduction ratio	3	3.6	5	6	7.5	9	10	12.5	15	18	20	25	30	36	50	60	75	90	100	120	150	180	200	round shaft
MBMU5AZAX MX8G□B		1.25	1.79	3.42	4.90	7.72	11.2	13.8	21.6	30.6	45.2	55.8	86.9	127	183	342								—	2.5
MBMU9A□AZ MBMU1E□AZ MZ9G□B MY9G□B		5.93	8.47	16.4	23.6	37.3	53.4	67.6	98.3	142	211	257	423	589	847	1684									5.6

Assembling of gear head

Assembling of gear head

• **Preparation for assembling**

(1) Use the product in combination with only the compatible gear head. Failure to observe this instruction will result in malfunction.

(2) Make sure that the O-ring is attached to the bottom of motor flange.
If the gear head is assembled with O-ring floating, it may result in grease leakage.

(3) When grease adheres to the end surface of gear head, thoroughly wipe it off.
If the gear head is assembled with grease adhered, it may exude.

• **Assembling**

(1) Direct the motor pinion upward, and make sure that the relation between direction of motor lead wire and output shaft of gear head matches with the equipment.

(2) Do not contact a tooth tip of pinion shaft to a tooth tip of gear head.
Set each toothes of motor and gear head correctly and gently press and turn the gear head in counter and counter-clockwise.

(3) To attach the gear head to an application, use the "attaching screws" supplied with the gear head and tighten the screws with appropriate torque and with care not to pinch the O-ring, so that the there is no gap between motor flange and gear flange.
The recommended torque is shown below.

Size	Gear head type	Screw size	Tightening torque	Attachment pitch
80 mm sq.	MX8G	M5	2.45 N·m	94 mm
90 mm sq.	MZ9G	M6	2.94 N·m	104 mm
	MY9G	M6	2.94 N·m	—

<Note>

Do not forcedly assemble the motor and gear head. Do not damage the tooth of the motor pinion and gear head. Incorrect assembly results in abnormal noise generation or shortened unit life.

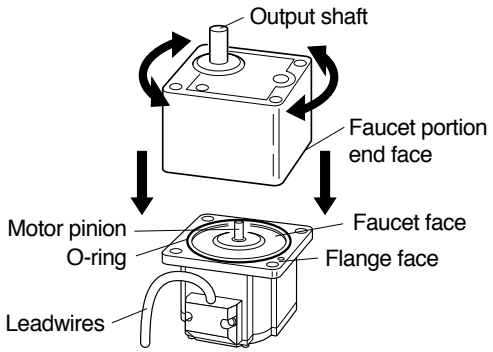

Maintenance/ Inspections

Maintenance/ Inspections

Routine maintenance and inspection are essential for proper and satisfactory operation of the motor.

Maintenance/ Inspection item

Maintenance/ Check item	Inspection procedure	Condition
Input voltage	Voltmeter	Must be within ±10% of rating.
Input current	Ammeter	Must be within rated input current described on nameplate.
Insulation resistance	Insulation resistance tester	The resistance of motor should be 1 MΩ or higher when tested with a 500 V megger. Measuring position: Between power input line (L1, L2,L3) and grounding wire Brushless motor: Across phase (U, V, W) and ground terminals
Noise	Hearing	Noise level must not be different from the usual level. In addition, abnormal noise such as rumbling noise must not be heard.
Vibration	By hand	Free from abnormal vibration.
Grease leakage	Visual check	Check that circumference of the motor and gear head are free from oil and grease. If grease leakage will cause problem, use grease sealing cover.
Installation bolt	Torque wrench	Check for loosening of bolt, and tighten additionally as necessary.
Use environment	By sight	Check the ambient temperature and humidity, and make sure that dirt, dust, or foreign substance is not found. Check the waste thread etc don't attached to the windhole of brushless amplifier.

Caution

• Power-on/off operations should be done by the operators themselves for ensuring safety in checking.

• Do not touch the motor while it is running or immediately after it stops because it gets hot and stays hot for a while after power has been turned off.

• When testing the insulation resistance of the brushless amplifier with the megger, disconnect the amplifier from all associated devices. Performing megger testing without first disconnecting these devices will cause failure.

When disassembly, troubleshooting, etc., is needed,
be sure to contact our service department or the sales agent of purchase.

Protective functions

Protective functions

Description of trip can be displayed only when the Digital key pad (option) or PC is connected. Protection function works even when the Digital key pad or PC is not connected, but it is not displayed.

Trip number	Protective item	Description	Measure	Display on Digital key pad
1	Sensor error	The brushless amplifier trips when trouble of CS sensor signal is detected.	Malfunction due to external noise is possible.	E-CS
—	Under voltage warning (default)	When the internal DC voltage is below specified value, operation is stopped; when voltage is recovered, operation is started again. (This is not trip, and no trip output is made.) • **Trip can be set by parameter 50.** Product of 100 V: Approx DC100 V, Product of 200 V: Approx DC200 V	Investigate the condition of wiring and circumstances of power supply.	L
2	Undervoltage error	• The brushless amplifier trips when internal DC voltage is below specified value **only if trip is set by parameter 50** 100 V product: Approx DC100 V, 200 V product: Approx DC200 V		E-LV
3	Overvoltage error	The brushless amplifier trips when internal DC voltage (voltage of smoothing function of power supply) rises and exceeds specified value. Product of 100 V: Approx DC200 V, Product of 200 V: Approx DC400 V	If the motor should trip in running, too short deceleration time is one of the causes. Adjust deceleration time. It is improvable if external regenerative resister is connected.	E-OV
—	Overload warning (Electronic thermal)	When the load factor reaches 100% overload warning level, the monitor display flashes.	Lower the load factor below 100% by reducing load, changing operation pattern or increasing motor capacity.	5-digit LED flashes.
4	Overload error (Electronic thermal relay)	The brushless amplifier trips when motor torque is output continuously above 115%.		THr
5	Overspeed error	The brushless amplifier trips when rotation speed (actual speed) exceeds specified value. Approx 6000 r/min	Check for overshooting due to too short acceleration time.	E-OS

Trip number	Protective item	Description	Measure	Display on Digital key pad
8	Overcurrent error	The brushless amplifier trips when the motor current exceeds specified current.	Excessive acceleration/ deceleration setting or gain setting is possible. Set the longer acceleration/ deceleration time and the smaller gain. If this trip should occur as soon as the unit is started, failure is possible.	E-OC
9	Overheat error	The brushless amplifier trips when the temperature in control section rises above specified value. Approx. 105 °C	Check the ambient temperature and cooling condition of brushless amplifier. Check the load factor and operation pattern.	E-OH
10	External forced trip	The brushless amplifier trips when external forced trip input turns on.	If an external thermal element is used, check the cause of temperature rise.	E-OL
11	Setting change warning	The brushless amplifier trips when any important parameter such as " **30** Run command selection" is changed.	This is not abnormal. Reset trip in order to make change effective.	CAU
12	RS485 communication error	The brushless amplifier trips when communication error of RS485 communication function occurs.	Check for noise problem in the vicinity.	E-485
30	Parameter initialization display	Select YES in " **54** Parameter initializing". Turn off power and then on to trip.	This is not abnormal. The parameter was initialized. It is clearable only by power supply re-injection.	- - - -
90 91	Parameter error	Parameter data saved in EEPROM is abnormal.	E-UPr: recheck and reset all parameters. E-SPr: internal parameter error. Possible failure	E-UPr E-SPr
Other number	CPU error	The brushless amplifier trips when trouble of control microcomputer is detected.	Malfunction due to external noise is possible. Investigate for noise source.	Err

Overload protection time characteristics

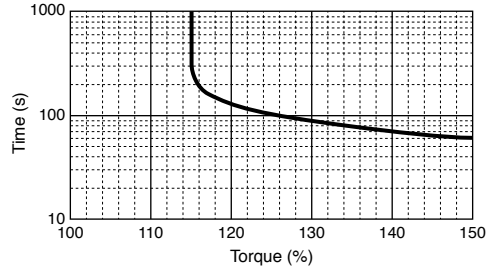

How to clear trip

How to clear trip

If the brushless amplifier should trip, eliminate the cause and use any of the procedures (1) to (3) below for reset.

(1) Turn off power, and when power LED has gone out, turn on power again.

(2) Press the switch ⊛⊛ and present trip state displayed.

(3) Input the trip reset signal.
(When F-r or r-F is chosen in " **33** I1/I2 function selection", enter " I1" and " I2" at the same time; when F-rST or r-rST is chosen, enter " I2" for trip reset.
Trip reset signal, when continued to be input, is designed to become ineffective in order to prevent inadvertent restarting. Enter trip reset signal only when necessary.)

(4) Resetting trip with PANATERM for BL
Trip can be reset from the PC by using optional PC connection cable *1 (option) and communication software (PANATERM for BL: can be downloaded from our web site free of charge).
For details, refer to PANATERM for BL instruction manual.

(5) Resetting trip via RS485 communication
Refer to section "Communication" starting with P.53.

Note: When the cause is Overcurrent error E-OC, Sensor error E-CS, CPU error Err or User parameter error E-UPr, turn off power as described (1) above. Otherwise, the trip cannot be reset.

<Caution>
In clear trip, be sure to find and remove the trip factor before clear.

*1 To use the optional PC connection cable (sold separately), RS232 port is required.
When the PC has no RS232 port, use RS232-USB converter.

Troubleshooting

If any trouble should be found, follow the steps below for check and countermeasure.

- If the cause cannot be found, it is recommended to use the Digital key pad, PANATERM for BL, RS232 communication, and check the detail of trip. If failure is likely, or when any part is damaged, or when you are in any other trouble, contact the sales agent of purchase or our company.

Phenomenon	Detail of checking	Measure, etc
Motor does not rotate.	Check for abnormality of wiring.	Apply proper wiring.
	Check whether protective function is activated. Check whether alarm LED (red) is on.	Check the detail of trip . Turn off power once, and turn on again.
	Check whether power LED (green) is lighted up.	Turn on power.
	Check whether voltage on input power is normal.	Check the supply voltage.
	Check whether operation start signal is input.	Check the condition of operation instruction.
	Check whether analogue speed instruction is set at 0 V.	Raise the analogue speed instruction little by little.
Motor does not rotate or stops during operation.	Check whether protective function is activated.	Overload is possible. Reduce the load or increase the output capacity.
Motor stops during deceleration.	Check whether the inertia of load is too large.	Regenerative voltage protection may have worked. Decrease the inertia. Turn off power once, and turn on again, and reset the trip state. Make deceleration time longer. Alternatively, apply free-run stop.
Large vibration or noise.	Output shaft of motor (gear head) and shaft of load are not aligned.	Check the joint between the output shaft and load shaft of the motor (gear head).
	Motor and gear head are not assembled correctly.	Check the assembling condition between motor and gear head, and their combination, and assemble them properly.
	Damage to gear head or bearing.	Contact us for repair.
Motor rotates reversely.	Check whether setting of rotation direction changeover input is wrong.	Check the position of rotation direction choosing switch for the Console A. As for others, check the status of " I2".
	Rotation direction of the motor and gear output shaft may be reversed for some gear reduction ratio of gear head.	Check the gear ratio and rotation direction. Please refer to the table of the permissible axis torque (P.20).
Rotation speed is unstable during operation (actual speed).	Check whether the load fluctuates greatly.	Reduce the fluctuation of load. Increase the output capacity.
Parameter dose not change.	Check whether operation start signal is input.	Some parameters cannot be changed when operation instruction is on. (See the check column of parameter list on P.37.) Turn off operation instruction before changing.

How to use Digital key pad (option)

Name of each part and how to setup

• What can be done by Digital key pad

- Monitoring of rotation speed (actual speed) and load factor, etc. (Rotation speed can be displayed being multiplied by the factor set by parameter **47** and **48**.)
- Display detail of trip, and trip history. Trip reset by pressing ⊕ and ⊖ .
- Parameter setting, initialization, and copying function.
- Start and stop of motor by RUN , STOP switch (Setting of parameter " **30** Run command selection" is required.)

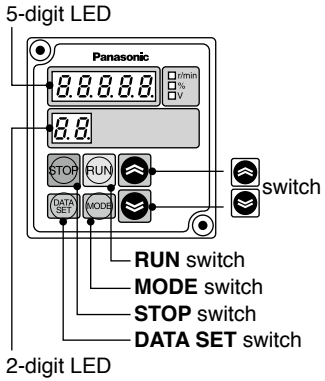

• Name of each part

5-digit LED	Displays rotation speed (actual speed), commanded speed, trip history, setting of parameter, and the like.
2-digit LED	Displays the number of parameter (in editing parameter). Displays the rotation direction in operation. Displays 00 when the motor is stopped. (CCW as viewed from the output shaft of motor ... F and CW... r) **Rotation direction of gear head output shaft may be reversed for some gear reduction ratio when gear head is incorporated.** Please refer to the table of the permissible axis torque (P.20).
MODE switch	Switch for changing monitor mode. Whenever this switch is pressed, the mode changes in this sequence: Rotation speed (actual speed) → Internal DC voltage (voltage of smoothing capacitor of power supply) → Load factor → Torque → Commanded speed → Rotation speed (actual speed) → ...* * When you press this switch in the parameter setting mode, setting is stored.
DATA SET switch	This switch is for changing parameter number mode and parameter setting mode, and for saved parameter setting.
⊕ ⊖ switch	This switch enables selection of parameter, and setting and changing of contents. When the motor is tripped, pressing ⊕ and ⊖ at the same time enables reset of trip.
RUN switch	This switch is for instruction of operation. (Only when " **30** Run command selection" is PnL) • See " **33** I1/I2 function selection" (2) on P.38 for rotation direction. • Disconnecting the Digital key pad while operating with RUN switch will stop the operation.
STOP switch	This switch is for instruction of stopping. (Only when " **30** Run command selection" is PnL)

• Description

Monitor mode	Displays rotation speed (actual speed), setting speed, internal DC voltage, load factor, and torque on 5-digit LED. **This mode is set when power is turned on.** Control changes to this mode when MODE switch is pressed in parameter number mode, parameter setting mode.
Parameter number mode	Displays a parameter number (**00** to **F0**) in **blinking**. Control changes to this mode when DATA SET switch is pressed in monitor mode. Parameter number can be changed and selected by ⊕ and ⊖ switch.
Parameter setting mode	Displays the detail of parameter (setting) in **blinking**. Change setting by ⊕ and ⊖ switch. When DATA SET switch or MODE switch is pressed after change of setting, it is saved in EEPROM.

* Displays rotation speed r/min in normal monitor mode. Displays torque and load factor assuming the rated motor torque at 100%.
* Display is just a guide. Do not use the Digital key pad for a measuring instrument.

Operating Instruction

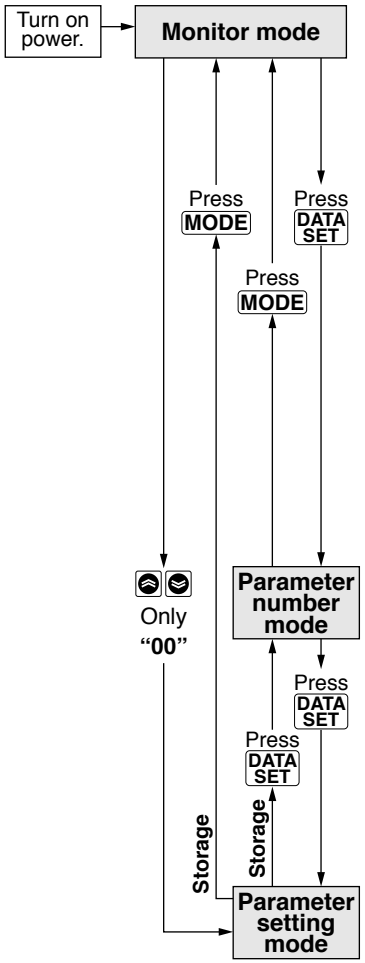

When DATA SET switch or MODE switch is pressed in parameter setting mode, data is stored.

• Press MODE switch for changing display.

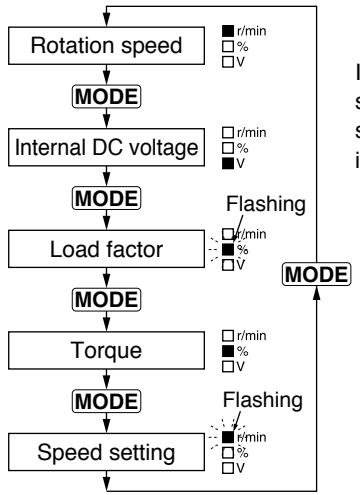

Internal speed (0-th speed) can be directly set by ⌃ and ⌄ in monitor mode.

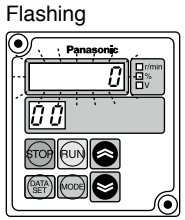

• 2-digil LED blinks and allows selection of parameter number.

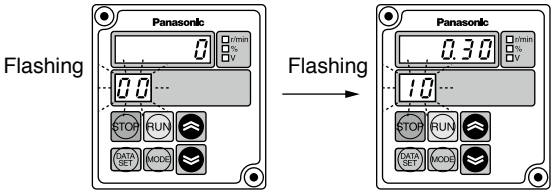

Change (select) a parameter number by ⌃ or ⌄.

• 5-digit LED blinks and allows change of parameter value.

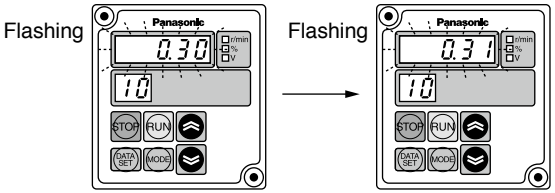

Change (select) a parameter value by ⌃ or ⌄.

• When ⌃ or ⌄ is pressed in monitor mode, detail of " **00** Internal speed (0-th speed)" is displayed in blinking, and speed setting can be changed by ⌃ and ⌄.
When " **31** Speed command selection" is PnL, the motor speed also changes following the speed setting if the motor is running.

Data is stored only when DATA SET switch is pressed. If the power is turned off without storage, setting data will return.

Test run (Digital key pad)

Inspection prior to test run/ Test run

Inspection prior to test run

(1) Make sure that all wiring is correct.
(2) Make sure that input power supply conforms to rating.

Test run

Test run procedure by the Digital key pad is as follows:
An example is introduced here where the motor runs CW at 1800 r/min with the Digital key pad.

(1) Be sure to first perform the work below for safety.
Separate the motor from machine or equipment, and make sure that the motor alone can be operated.
(2) Then turn on power and follow the step below for test run.

Description of operation	Digital key pad	
	Switch	LED display
[1] Turn on power		0 r/min % V 00
[2] Change of initial setting (Change the choice of operation instruction from I1/I2 rEr to the Digital key pad PnL.)	Press DATA SET	0 r/min % V 00 Flashing
	Press ⌃ several times to choose parameter **30**.	rEr r/min % V 30 Flashing
	Press DATA SET	rEr r/min % V 30 Flashing ⇨ PnL r/min % V 30 Flashing
	Press ⌄ to change parameter value.	
	Store by DATA SET.	
	Setting change warning is issued because setting of operation instruction has been changed.	CAU r/min % V
[3] Trip reset	Press ⌄ and ⌄ at the same time.	CAU r/min % V ⇨ 0 r/min % V 00

Test run (Digital key pad)

Description of operation	Digital key pad	
	Switch	LED display
[4] Change of initial setting 2 (Change the choice of speed instruction from analogue speed instruction input to " **00** Internal speed (0-th speed)" to enable use of Digital key pad.)	Press DATA SET	
	Press ⊛ several times to choose parameter **31**.	0 00 Flashing → VoL-A 31 Flashing
	Press DATA SET	
	Press ⊙ to change parameter value.	VoL-A 31 Flashing → PnL 31 Flashing
	Store by DATA SET .	
	Setting change warning is issued because setting of operation instruction has been changed.	CAU
[5] Trip reset	Press ⊙ and ⊙ at the same time.	CAU → 0 00
[6] Choosing rotation direction* (This operation is not required for rotation forward [CCW].)	Press DATA SET	
	Press ⊛ choose several times to parameter **33**.	0 00 Flashing → rS.Fr 33 Flashing
	Press DATA SET	
	Press ⊙ to change parameter value.	rS.Fr 33 Flashing → r-F 33 Flashing
	Store by DATA SET .	
	Setting change warning is issued because setting of operation instruction has been changed.	CAU
[7] Trip reset	Press ⊙ and ⊙ at the same time.	CAU → 0 00

Description of operation	Digital key pad		
	Switch	LED display	
[8] Speed setting	Press ⊛	0 00 Flashing	• Internal speed (0-th speed) is displayed (setting at 0 r/min).
	Press ⊛ to set a speed.	1800 00 Flashing	• Set the Internal speed setting (0-th speed) at 1800 r/min.
[9] Reset to monitor mode.	Press MODE	0 00	• Data is still stored if power is cut off here.
[10] Operation instruction	Press RUN	1800 r	· Display of rotation speed changes little by little toward 1800 r/min • Display of rotation direction* ("r" indicates that the motor is rotating CW.)
[11] Stop instruction	Press STOP	0 00	• Display of rotation speed changes little by little toward 0 r/min.
[12] Power OFF			

<Checkpoint in Test run>

(1) Check whether the motor rotates smoothly. Check for abnormal noise and vibration.

(2) Check whether the motor is accelerated and decelerated smoothly.

(3) Rotation direction and rotation speed of the motor are matched?

* Rotation direction of gear head output shaft may sometimes be reversed due to reduction gear ratio when gear head is installed.

* Rotation direction can also be changed by use of "I2". See " **33** I1/I2 function selection" (2) on P.45.

■ Setting is still stored when power is turned off. When operating the motor with Digital key pad only in trial run, either reset the setting or initialize parameters after completion of trial run. (Parameter **54**)
Here, note that all parameters return to default when parameters are initialized.

How to copy parameter

1. Reading a parameter value from brushless amplifier to the Digital key pad.

• Once parameters are read into the console, their details are stored in the Digital key pad.

Description of operation	Digital key pad	
	Switch	LED display
[1] Turn on power		0 / 00
[2] Call " **57** parameter copy"	Press DATA SET Hold down ⊕ to choose parameter **57**.	Parameter value / 00 Flashing ⇨ n0 / 57 Flashing
[3] P.LOAd Choose reading a parameter into the Digital key pad.	Press DATA SET Press ⊕ twice to choose P.LOAd .	n0 / 57 Flashing ⇨ P.LoAd / 57 Flashing
[4] Read a parameter into the Digital key pad.	Press DATA SET for 1 second while holding down STOP .	P.LoAd / 57 Flashing→Slow flashing (once per second)
[5] Wait about 30 seconds.		P.End
[6] Reading of parameter into the Digital key pad completed	Press STOP	0 / 00

2. Copy a parameter value saved in the Digital key pad onto the brushless amplifier.

Description of operation	Digital key pad	
	Switch	LED display
Turn on power. Call " **57** parameter copy". (Same operation as 1. [1] and [2])		
[1] P.PrOC Choose writing a parameter to the brushless amplifier.	Press DATA SET Press ⊕ three times to choose P.PrOC .	n0 / 57 Flashing ⇨ P.PrOC / 57 Flashing
[2] Write a parameter to the brushless amplifier.	Press DATA SET for 1 second while holding down STOP.	P.PrOC / 57 Flashing→Slow flashing (once per second)
[3] Wait about 10 seconds.		P.End
[4] Completion of writing a parameter from the Digital key pad to the brushless amplifier.		CAU
[5] Reset to monitor mode.	Press ⊕ and ⊖ at the same time for clear trip.	0 / 00

Error while copying a parameter

P.Err1 : Data is abnormal while copying.
→ Press STOP switch for clearing, and then copy data again. If data is still abnormal, initialize the Digital key pad and retry.

P.Err2 : Copy error
→ This error occurs in an attempt to copy data between products of different function. Press STOP switch for clear.
Parameters can be copied between the same models, but parameters should be copied between the same output in principle because gain setting is different.

How to copy parameter

3. Initializing of data of Digital key pad.

- When any trouble occurs during copying, it can be often solved by initializing the Digital key pad. (Stored data is cleared by initializing.)

Description of operation	Digital key pad	
	Switch	LED display
Turn on power and call " **57** parameter copy". (Same operation as 1. [1] and [2])		
[1] P.In IT Choose initialization of data of Digital key pad.	Press DATA SET Press ⊙ once and choose P.In IT .	nO r/min %V 57 Flashing ⇨ P.In IT r/min %V 57 Flashing
[2] Initialization of Digital key pad.	Press DATA SET for 1 second while holding down STOP.	P.In IT r/min %V Flashing→ Continuous lighting 57 LED display changes from flashing to continuous lighting during initializing operation.
[3] Wait about 30 seconds.		P.End r/min %V
[4] Initializing of data of Digital key pad completed	Press STOP	0 r/min %V 00

- Do not turn off power or disconnect the cable of Digital key pad during operation such as "Reading a parameter from the brushless amplifier to the Digital key pad", "Copying a parameter value stored in the Digital key pad to the brushless amplifier", and "Initializing the data of Digital key pad".

List of parameters (Default)

Outline of parameters

Brushless amplifier of this series is equipped with various parameters for adjustment and setup to characteristics and functions. Amplifier in optimum condition for your running requirements.

Composition of parameters and list of default

Parameter No.	Name of parameter	Parameter setting			
		Setting range	Minimum unit	Default	Check*1
00	Internal speed (0-th speed)	0 to " **3b** Upper speed limit"	1 r/min	0	
01	1st speed			3000	
02	2nd speed			1200	
03	3rd speed			600	
04	4th speed			0	
05	5th speed			0	
06	6th speed			0	
07	7th speed			0	
10	1st acceleration time	0.01 to 300 sec: to 3 sec: Incremented by 0.01 second; 3 sec to 30 sec: Incremented by 0.1 second; 30 sec to 300 sec: Incremented by 1 second		0.30	
11	2nd acceleration time			0.30	
12	1st deceleration time			0.30	
13	2nd deceleration time			0.30	
14	Acceleration mode selection	Lin Linear S-1 S shape-1 S-2 S shape-2		Lin	
15	Deceleration mode selection			Lin	
16	Stop mode selection	FrEE Free-run stop dEC Speed reduction stop		dEC	
17	Free-run waiting time	0.0 to 10.0 sec	0.1 sec	1.0	
1A	Velocity loop proportional gain	0 to 10000	1	400	
1b	Velocity loop integration gain	0 to 10000	1	500	

*1 When parameter marked with "**C**" in the check column is changed and stored, the unit is tripped for safety. It is not allowed to change them while the motor is running.

List of parameters (Default)

Parameter No.	Name of parameter	Parameter setting			
		Setting range	Minimum unit	Default	Check*1
30	Run command selection	PnL. RUN and STOP of Digital key pad rEr I1/I2*2 SIG RS485 communication		rEr	C
31	Speed command selection	PnL. " **00** Internal speed (0-th speed)" UoL-A FIN*3		UoL-A	C
32	Operation mode selection	1 1st speed operation mode 2 2nd speed operation mode 4 4th speed operation mode 8 8th speed operation mode		1	C
33	I1/I2 function selection	F-r [I1: CCW run/stop, I2: CW run/stop] r-F [I1: CW run/stop, I2: CCW run/stop] rS.Fr [I1: run/stop, I2: CW run/ CCW run] F-rSr [I1: CCW run/stop, I2: Trip reset] r-rSr [I1: CW run/stop, I2: Trip reset]		rS.Fr	C
34	I3 function selection	FrEE Free run rHr External forced trip U-d 2nd acceleration / deceleration rSr Trip reset		FrEE	C
35	I4 function selection			rSr	C
36	I5 function selection			FrEE	C
3A	Lower speed limit	0 to " **3b** Upper speed limit"	1 r/min	0	C
3b	Upper speed limit	0 to 4000 r/min	1 r/min	4000	C
3C	Torque limit	0 to 150	1%	150	

*1 When parameter marked with "**C**" in the check column is changed and stored, the unit is tripped for safety. It is not allowed to change them while the motor is running.
*2 Corresponds to RUN/STOP switch of the Console A or signal input.
*3 Corresponds to the speed potentiometer or analogue speed instruction of the Console A.

Parameter No.	Name of parameter	Parameter setting			
		Setting range	Minimum unit	Default	Check*1
40	O1 function selection	trIP Trip SrbL Arriving rUn Running FrEE Free-run F CCW run r CW run Ct-L Overload detection POUT Speed pulse signal		trIP	
41	O2 function selection			POUT	
42	O1 output polarity selection	nOr Normal polarity rEU Reverse polarity		nOr	
43	O2 output polarity selection				
44	Speed matching range	20 to " **3b** Upper speed limit"	1 r/min	50	
45	Output pulse count selection	1, 2, 3, 4, 6, 8, 12, 24		24	
46	Monitormode selection	O.-r Rotation speed (Actual speed) O.-L Torque AU.-L Load factor S.-r Command speed dC-U Internal DC voltage		O.-r	
47	Numerator of display magnification factor	1 to " **48** Denominator of display magnification factor" × 10	1 time	1	
48	Denominator of display magnification factor	1 to 1000	1 time	1	
4A	Trip history clear	nO No operation YES Clear trip history		nO	
4b	Trip history 1	–		–	
4C	Trip history 2			–	
4d	Trip history 3			–	
4E	Trip history 4			–	
4F	Trip history 5			–	

*1 When parameter marked with "**C**" in the check column is changed and stored, the unit is tripped for safety. It is not allowed to change them while the motor is running.

List of parameters (Default)

Parameter No.	Name of parameter	Parameter setting			
		Setting range	Minimum unit	Default	Check*1
50	Undervoltage trip selection	nO No trip YES Trip		nO	C
51	Retrial selection	nO ,1 to 4		nO	C
52	Retrial start time	1 to 120 sec	1 sec	5	
54	Parameter initializing	nO No operation YES Initialize to default		nO	
57	Parametercopy function	nO No copying of parameter P.InIT Initializing the data of Digital key pad P.LOAd Reading a parameter to the Digital key pad P.PrOG Writing a parameter to brushless amplifier		nO	
5A	RS485 device number*4	128 to 159		129	C
5b	RS485 communication speed*4	0: 2400 bps 1: 4800 bps 2: 9600 bps		2	C
5C	RS485 communication standard*4	0 to 11		4	C
5d	RS485 communication response time*4	10 to 1000	1 ms	10	C
5E	RS485 retry times of communication*4	0 to 8: Retry count, 9: No retry		9	C
5F	RS485 protocol timeout*4	1 to 255	1 s	2	C
F0	For manufacturer use	–		–	

*1 When parameter marked with "**C**" in the check column is changed and stored, the unit is tripped for safety. It is not allowed to change them while the motor is running.

*4 Changes become effective by turning on a power supply again 10 seconds after power supply OFF.

LED display

LED display

Figures displayed on the 7 segment display of the Daigital key pad are shown below:

Alphanumeric	LED display	Alphanumeric	LED display
A	A	S	S
B	b	T	t
C	C	U	U
D	d	V	U
E	E	Y	y
F	F	0	0
G	G	1	1
H	H	2	2
I	I	3	3
K	k	4	4
L	L	5	5
N	n	6	6
O	o, O*	7	7
P	P	8	8
Q	q	9	9
R	r		

Example of LED display

Example

Description in the text	Display on Diqtal key pad
PnL	PnL
TEr	TEr
FrEE	FrEE
rST	rST

* LED display of "O" is available in two types.

Example

Description in the text	Display on Diqtal key pad
VoL-A	UoL-A
nO	nO

The function of parameters

Parameter No.	Name of parameter	Description
00	Internal speed (0-th speed)	Desired running speed can be set. This is effective when " **31** Speed command selection" is PnL (PANEL). Upper limit is limited by " **3b** Upper speed limit".
01 to 07	1st speed to 7th speed	Speed in multi-speed running can be set. It is effective when " **32** Operation mode selection" is set to 2-speed operation mode.
10 **11**	1st acceleration time 2nd acceleration time	The change factor of output speed in acceleration can be determined. • **Set by time for changing 1000 r/min.** When it is 0.3 sec (default), time taken for accelerating from 0 to 3000 r/min is 0.9 sec. • Time can be incremented by 0.01 sec for below 3 sec, by 0.1 sec from 3 sec up to 30 sec exclusive, and by 1 sec from 30 sec upward.
12 **13**	1st deceleration time 2nd deceleration time	The change factor of output speed in deceleration can be determined. • **Set by time for changing 1000 r/min.** When it is 0.3 sec (default), time taken for decelerating from 0 to 3000 r/min is 0.9 sec. • Time can be incremented by 0.01 sec for below 3 sec, by 0.1 sec from 3 sec up to 30 sec exclusive, and by 1 sec from 30 sec upward.
14 **15**	Acceleration mode selection Deceleration mode selection	Straight line acceleration/deceleration and curve (S-shape) acceleration and deceleration can be chosen individually for acceleration and deceleration. Lin LINEAR — Straight line up to speed setting. Standard mode for accelerating and decelerating. S-1 "S" SHAPE-1 — Straight line up to speed setting. Standard mode for accelerating and decelerating. S-2 "S" SHAPE-2 — Relaxes the speed change in start and end of acceleration and deceleration.

Parameter No.	Name of parameter	Description
16	Stop mode selection	You can select how to stop the motor. FrEE (FREE) Power supply to the motor is cut off and the motor is stopped naturally when stop command is input (free-run stop). It takes longer for the motor to completely stop when load inertia is big. dEC (DECEL) When stop command is input, the motor reduces its speed according to preset deceleration time, Electric-brake is performed by Zero-speed control, and then power is cut off to the motor after elapse of time set by " **17** Free-run waiting time", and the motor is set in free-run state. **<Example or running pattern in deceleration stop>** • The motor is servo-rocked in Zero-speed control. (Electrically controlled so that motor speed is Zero) Run command Speed setting — Deceleration by preset change factor of deceleration time Motor speed — Time set by " **17** Free-run waiting time" Free-run Deceleration running — Zero-speed control
17	Free-run waiting time	When " **16** Stop mode selection" is set to dEC (DECEL) deceleration stop, servo lock time (Zero-speed control) after deceleration can be adjusted. (Free-run state is set after that.)
1A	Velocity loop proportional gain	Enables setting of proportional gain of velocity amplifier. It need not be changed normally. When this value is made greater, gain is increased, which improves responsiveness of the motor. When this value is made too large, operation is vibratory. Setting range: 0 to 10000, Setting resolution: 1
1b	Velocity loop integration gain	Enables setting of integration gain of velocity amplifier. It need not be changed normally. When this value is made greater, gain is increased, which improves rigidity of the motor (strength of servo lock). When this value is made too large, overshooting becomes greater, and the motor is vibratory. Setting range: 0 to 10000, Setting resolution: 1

The function of parameters

Parameter No.	Name of parameter	Description
30	Run command selection	Run command can be chosen from the following: PnL (PANEL): Command the motor to stop with switch of Digital key pad. The motor cannot be operated by signal input "I1" and "I2". Signal input is effective only in setting rotation direction, etc. See "**33** I1/I2 function selection". TEr (TERMINAL): Only the input terminal "I1" and "I2" are effective. (Corresponds to RUN/STOP, rotation direction selection switch of Console A.) SIG (SIGNAL): Command by RS485 (Operation command by I/O is invalid, but trip or sensor input is excluded.)
31	Speed command selection	You can choose whether to use "**00** Internal speed (0-th speed)" or analog input terminal "FIN" for speed command. PnL (PANEL): "**00** Internal speed (0-th speed)" VoL-A (VOL-A): Analog input terminal "FIN" (voltage instruction DC 0 to 5V) (Corresponds to speed potentiometer of Console A.)
32	Operation mode selection	Parameter for choosing operation mode

Setting	Operation made	Function of signal input		
		I3	I4	I5
1	1st speed operation mode		Free-run stop External forced trip	
2	2nd speed operation mode	Speed setting	2nd acceleration/deceleration time Trip reset	
4	4th speed operation mode	Speed setting	Speed setting	
8	8th speed operation mode	Speed setting	Speed setting	Speed setting

(1) 2nd speed operation mode

I3	Setting to be chosen
OFF	Internal speed (0-th speed) or FIN
ON	1st speed

(2) 4th speed operation mode

I3	I4	Setting to be chosen
OFF	OFF	Internal speed (0-th speed) or FIN
ON	OFF	1st speed
OFF	ON	2nd speed
ON	ON	3rd speed

" **32** Operation mode selection" Continued to the next page.

Parameter No.	Name of parameter	Description
32	Operation mode selection	(3) 8th speed operation mode

I3	I4	I5	Setting to be chosen
OFF	OFF	OFF	Internal speed (0-th speed) or FIN
ON	OFF	OFF	1st speed
OFF	ON	OFF	2nd speed
ON	ON	OFF	3rd speed
OFF	OFF	ON	4th speed
ON	OFF	ON	5th speed
OFF	ON	ON	6th speed
ON	ON	ON	7th speed

33 — I1/I2 function selection

(1) For setting "I1" or "I2" function

F-r (FORWARD-REVERSE)

State of I1 and I2		Action
I1	I2	
OFF	OFF	Stop Deceleration stop when "**16** Stop mode selection" is dEC
ON	OFF	CCW run
OFF	ON	CW run
ON	ON	Free-run stop Trip reset (which must be retained 0.2 sec or longer) *

r-F (REVERSE - FORWARD)

State of I1 and I2		Action
I1	I2	
OFF	OFF	Stop Deceleration stop when "**16** Stop mode selection" is dEC
ON	OFF	CW run
OFF	ON	CCW run
ON	ON	Free-run stop Trip reset (which must be retained 0.2 sec or longer) *

rS.Fr (RUNSTOP. FORWARD-REVERSE)

State of I1 and I2		Action
I1	I2	
OFF	OFF	Stop Deceleration stop when "**16** Stop mode selection" is dEC
ON	OFF	CCW run
OFF	ON	Stop Deceleration stop when "**16** Stop mode selection" is dEC
ON	ON	CW run

* Effective only when trip occurs

" **33** I1/I2 function selection" Continued to the next page.

Parameter No.	Name of parameter	Description
33	I1/I2 function selection	F-rSt (FORWARD-TRIP RESET)

State of I1 and I2		Action
I1	I2	
OFF	—	Stop Deceleration stop when "16 Stop mode selection" is dEC
ON	—	CCW run
—	ON	Trip reset (which must be retained 0.2 sec or longer) *

r-rSt (REVERSE-TRIP RESET)

State of I1 and I2		Action
I1	I2	
OFF	—	Stop Deceleration stop when "16 Stop mode selection" is dEC
ON	—	CW run
—	ON	Trip reset (which must be retained 0.2 sec or longer) *

(2) When " **30** Run command selection" is PnL (PANEL), the motor can be commanded with **RUN** **STOP** switch of Digital key pad.
Rotation direction in this case can be set by parameter and "I1" "I2" state. "I1" "I2" are off when only Digital key pad is connected.

F-r (FORWARD-REVERSE)

State of I1 and I2		Action
I1	I2	
OFF	OFF	CCW rotation selection
ON	OFF	
OFF	ON	CW rotation selection
ON	ON	Free-run stop irrespective of **RUN** switch Trip reset (which must be retained 0.2 sec or longer)*

r-F (REVERSE-FORWARD)

State of I1 and I2		Action
I1	I2	
OFF	OFF	CW rotation selection
ON	OFF	
OFF	ON	CCW rotation selection
ON	ON	Free-run stop irrespective of **RUN** switch Trip reset (which must be retained 0.2 sec or longer)*

* Effective only when trip occurs

" **33** I1/I2 function selection" Continued to the next page.

Parameter No.	Name of parameter	Description
33	I1/I2 function selection	rS.Fr (RUNSTOP. FORWARD-REVERSE)

State of I1 and I2		Action
I1	I2	
—	OFF	CCW rotation selection
—	ON	CW rotation selection

F-rSt (FORWARD-TRIP RESET)
CCW run with **RUN** switch

State of I1 and I2		Action
I1	I2	
—	ON	Trip reset (which must be retained 0.2 sec or longer) *

r-rSt (REVERSE-TRIP RESET)
CW run with **RUN** switch

State of I1 and I2		Action
I1	I2	
—	ON	Trip reset (which must be retained 0.2 sec or longer) *

34 35 36	I3 function selection I4 function selection I5 function selection	The function of signal input I3 can be individually selected as follows: FrEE (FREE) : ON (shorted between signal I3 and "GND") → Free-run stop instruction THr (THERMAL) : OFF (open between signal I3 and "GND") → External forced trip instruction • Before setting, short-circuit I3 to G. Open circuit will cause tripping. U-d (UP-DOWN): ON (shorted between signal I3 and "GND") → 2nd acceleration/deceleration time rSt (RESET) : ON (open between signal I3 and "GND") → Trip reset instruction
3A	Lower speed limit	When " **31** Speed command selection" is analogue speed instruction VoL-A (VOL-A), motor setting speed at 0 V input is set. Speed instruction value Upper speed limit Lower speed limit Input voltage 0 0.5 4.5 5 V
3b	Upper speed limit	Upper limit of motor command speed. When " **31** Speed command selection" is analogue speed command VoL-A (VOL-A), motor setting speed at 5 V input is set. Further, upper limit of " **00** Internal speed (0-th speed)" and " **01** 1st speed" and " **44** Speed matching range" is limited by this parameter.

The function of parameters

Parameter No.	Name of parameter	Description
3C	Torque limit	Upper limit of motor output torque is set. (No precision is provided because torque is not controlled. Use as a guide.) 100% indicates the rated torque.
40 **41**	O1 function selection O2 function selection	Output terminal “O1” and “O2” can also be selected as follows. Polarity of “ **40** O1 function selection” and “ **41** O2 function selection” can be inverted by “ **42** O1 output polarity selection” and “ **43** O2 output polarity selection” trIP (TRIP) : Trip signal (Trip: ON) StbL (STABLE) : Arriving signal (Speed is reached to a command value ON) → See “ **44** Speed matching range”. run (RUN) : Run/Stop signal (When running: ON) FrEE (FREE) : Free-run signal (During free run: ON) F (FORWARD) : CCW run signal (During CCW run: ON) r (REVERSE) : CW run signal (During CW run: ON) Ct-L (CHECK-L) : Overload detection Output when load exceeds 100% (Load exceeds 100%:ON) POUT (PULSE-OUT) : Speed pulse signal → See “ **45** Output pulse count selection”.
42 **43**	O1 output polarity selection O2 output polarity selection	This is a function for inverting the polarity of signal output between output terminal “O1” “O2” and “GND”. nOr (NORMAL) : Transistor “ON” when activated rEU (REVERSE) : Transistor “OFF” when activated
44	Speed matching range	When “ **40** O1 function selection” and “ **41** O2 function selection” are chosen to StbL (STABLE) Arriving signal, “Speed matching range" for output arriving signal can be adjusted. • When difference between actual rotation speed and speed setting is smaller than "Speed matching range”, arriving signal is output. • Even if the speed is reached, when speed matching range is set too small, arriving signal may turn on and off due to speed fluctuation. • Arriving signal is not output when CCW/CW changes.

Parameter No.	Name of parameter	Description
45	Output pulse count selection	When “ **40** O1 function selection” and “ **41** O2 function selection” are set to POUT (PULSE-OUT), pulse count is set to be output to “O1” “O2” while the motor makes one turn. (To be selected from 1, 2, 3, 4, 6, 8, 12, and 24) 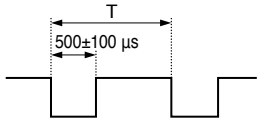 (Ex) When rotation number is 3000 r/min, in the case where “ **45** Output pulse selection” is 24, $T = \frac{60}{3000 \times 24} = 0.83$ ms Frequency f = 1/T = 1.2 kHz
46	Monitor mode selection	You can choose description to be displayed on 5-digit LED when turning on power. O.-r (OUTPUT-REVOLUTION) : Rotation speed O.-L (OUTPUT-LOAD) : Torque AU.-L (AVERAGE-LOAD) : Load factor (average torque) S.-r (SETTING-REVOLUTION) : Speed command dC-U (DC-VOLTAGE) : Internal DC voltage (Voltage of smoothing capacitor of power supply) In speed display mode, the value multiplied by “ **47** Numerator of display magnification factor” / “ **48** Denominator of display magnification factor” is displayed.
47	Numerator of display magnification factor	You can set the multiplying factor of a value displayed on 5-digit LED. Value of **47** ÷ **48** is a display multiplying factor. Set a value in the range where calculated display magnifying factor is 10 to 1/1000. Rotation number of gear output shaft and the speed of line can be displayed. When the display magnifying factor is changed, the parameter relating to speed (below) is displayed by a value multiplied by display multiplying factor. “ **00** Internal speed (0-th speed)” “ **01** 1st speed” “ **3A** Lower speed limit” “ **3b** Upper speed limit” “ **44** Speed matching range”
48	Denominator of display magnification factor	
4A	Trip history clear	Trip history 1 to 5 can be cleared. **<Clear procedure>** Cut off power with YES (YES) selection, and turn on power again after display has disappeared, then - - - - - is displayed, and trip history is cleared. When power is turned on again, normal operation is started.
4b **4C** **4d** **4E** **4F**	Trip history 1 Trip history 2 Trip history 3 Trip history 4 Trip history 5	Trip history for 5 times in the past is stored. Trip history 1 is the latest history. See “Protective function” for displayed description. When no history is available, - - - - - is displayed.

The function of parameters

Parameter No.	Name of parameter	Description
50	Undervoltage trip selection	When [n0] (NO) is selection, the motor is not tripped at insufficient voltage. If voltage should fall and undervoltage status is found while the motor is running, the motor stops after running free, while if operation instruction is input after recovery of power, the motor is restarted automatically. (• Be cautious.) When [YES] (YES) is selection, the motor is tripped at undervoltage, and alarm LED blinks. When normal power is off, trip is not stored in trip history. Trip is stored only when power has stopped instantaneously (Trip is stored in trip history only when undervoltage once becomes short and then is recovered normal)
51	Retrial selection	Automatic reset in trip (trip retrial) can be set here. Trip can be is automatically reset to allow operation to continue. Use this function only on such equipment that has no problem of safety even if the motor is automatically restarted. • Retrial is impossible if trip is by Overcurrent error [E-OC], Sensor error [E-CS], System error [Err], User parameter error [E-UPr], or System parameter error [E-SPr]. When [n0] (NO) is selection, retrial is not effective. When [1] to [4] is selection, retrial is made for the set number of times. When 2 hours has elapsed with no trip, the number of retrying times is initialized to 0. Set the interval between retrials by " **52** Retrial start time". When trip occurs in excess of preset number of trials, the brushless amplifier outputs trip signal and stops. • During retrial, trip signal is not output (It is stored in trip history)
52	Retrial start time	You can set waiting time until retrial operation is performed after tripping is found. You can set 1 to 120 seconds.
54	Parameter initializing	Parameters can be initialized to the factory default. **<Initializing procedure>** Cut off power with [YES] (YES) selection, and turn on power again after display has disappeared, then [- - - - -] is displayed, and parameters are initialized to the factory default.
57	Parameter copy	Parameters can be copied. [n0] (NO) Parameters are not copied [P.In IT] (PARAMETER-INITIALIZE): Initialization of Digital key pad data [P.LOAd] (PARAMETER-LOAD): Reading parameters into Digital key pad data [P.PrOG] (PARAMETER-PROGRAM): Writing parameters to the brushless amplifier See the copying method of parameters on P.35 for detail

Parameter No.	Name of parameter	Description
5A	RS485 device number	Set the device number of motor in communication (Motor ID). This value is the shaft number in communication. 80h (128) is the device number for setting control data (such as control start) by one operation to all connected motors. (No response is made by motors.) When the device number is set to 80h (128), change of parameter and request for status are ignored, therefore set to 81h (129) to 9Fh (159) normally.
5b	RS485 communication speed	Set the communication speed of RS485 communication. 0: 2400bps 1: 4800bps 2: 9600bps
5C	RS485 communication standard	Set the communication standard of RS485 communication. 0: 8 bits, no parity, stop bit 1 1: 8 bits, no parity, stop bit 2 2: 8 bits, odd number parity, stop bit 1 3: 8 bits, odd number parity, stop bit 2 4: 8 bits, even number parity, stop bit 1 5: 8 bits, even number parity, stop bit 2 6: 7 bits, no parity, stop bit 1 7: 7 bits, no parity, stop bit 2 8: 7 bits, odd number parity, stop bit 1 9: 7 bits, odd number parity, stop bit 2 10: 7 bits, even number parity, stop bit 1 11: 7 bits, even number parity, stop bit 2
5d	RS485 communication response time	Communication response time is the shortest time for setting transmission mode in RS485 bus for response after the motor has received communication data. Actual data response time depends on the type and data of order. Unit [ms]
5E	RS485 retry times of communication	Set the retry times of RS485 communication. 0 to 8: Number of retrials 9: No retrial
5F	RS485 protocol timeout	Protocol timeout is the time allowed from reception of a character code to reception of the next one in communication. If normal character code is not received within this time, communication is timed out, and received data is discarded. If timeout should continue to occur, and the number of detections exceed the retry times, the motor trips due to RS485 communication error. Unit [seconds]
F0	For manufacturer use	It cannot be changed.

Outline of PANATERM for BL

Communicating software “PANATERM for BL” can do the following thing.

(1) Setting and saving of parameters of brushless amplifier and writing setting to memory EEPROM.
(2) Monitor of input/output signals, monitor of a load factor.
(3) The present trip display and reference of a trip history.
(4) Data measurement of waveform graphics, and the call of preservation data.

Example of an operation pattern

• Example of running pattern by use of 2nd acceleration / deceleration time.
When you choose “ **32** Operation mode selection” at [1] : 1st speed operation mode, choose “ **33** I1/I2 function selection” at [rSFr] : (RUNSTOP, FORWARD-REVERSE), and choose “ **34** I3 function selection” at [U-d] : 2nd acceleration and deceleration time.

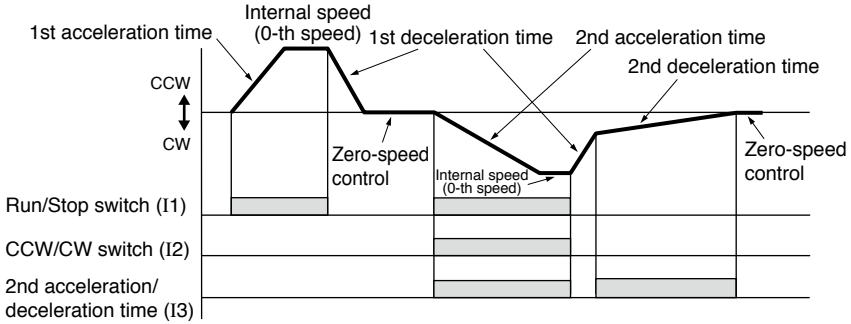

• Example of operation pattern in 2nd speed operation mode
When you choose “ **32** Operation mode selection” at [2] : 2nd speed operation mode, “ I3” is choosing of speed setting, and works as follows:

I3	Speed setup
OFF	Internal speed (0-th speed) or FIN
ON	1st speed

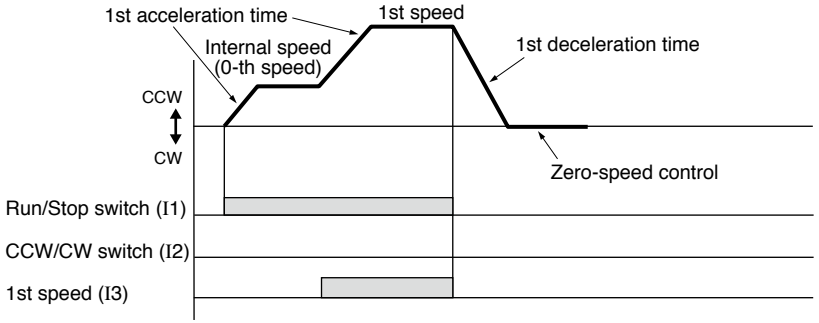

Communication

Overview of communication

With the upper host controller, which can be connected with 31 brushless amplifiers at the maximum via serial communication conforming to RS485, enables the following:

1. Rewriting parameters
2. Browsing and clearing status and history of trip condition
3. Monitoring control status including present position, status, I/O, etc.
4. Start and stop of motor

[Advantage]

• It is allowed to write parameters by one operation from host controller in startup of the machine.
• Operating condition of the machine can be displayed, which improves serviceability.

Connection of communications line

Connect one host controller with more than one brushless amplifier via RS485 communication, and set the device number of each brushless amplifier (Pr5A) at 81h (129) to 9Fh (159). Set the device number for the host as 01h (1) to 1Fh (31).

<Note>
Device number is set at 81h (129) in default setting. When connecting more than one brushless amplifier via RS485, be sure to change the device number beforehand with the Digital key pad or communication software “PANATERM for BL” (Can be downloaded from our web site).

[Example of connection]

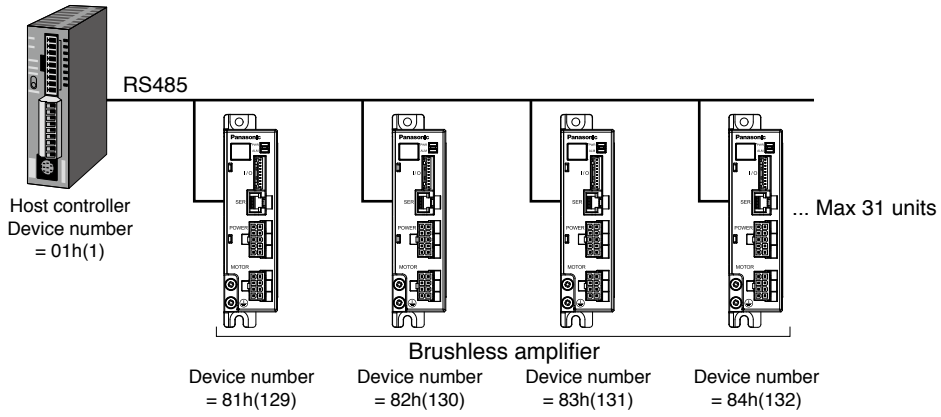

Communication

Interface of connector for communications unit

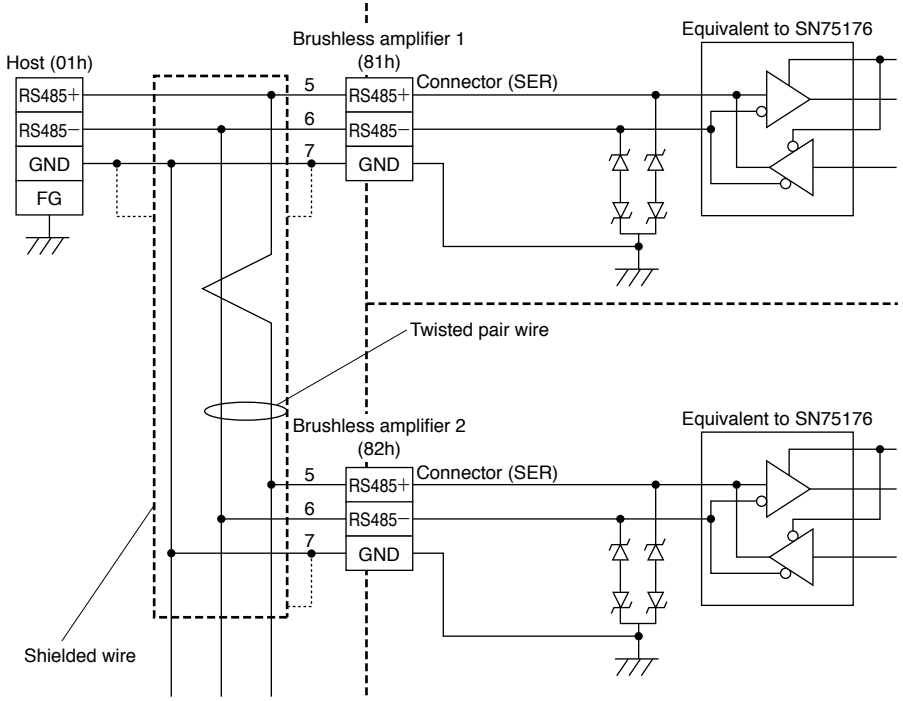

- Use the shield of shielded wire for GND.
- Set the maximum total extension of cable within 10 m in use.
- Terminal resistor is not required.

Communication system

RS485	Half duplex, asynchronous communication method	
Communication baud rate	2400, 4800, 9600 bps	Set by Pr5b
Data	7 bits, 8 bits	Set by Pr5C
Parity	None, even number, or odd number	Set by Pr5C
Start bit	1 bit	
Stop bit	1 bit, 2 bits	Set by Pr5C
Host address	01h to 1Fh	
Amplifier address	80h to 9Fh (80h for simultaneous transmission.)	Set by Pr5A

- Modification of transmission parameters (Pr5A to 5F) becomes effective when resetting the power supply of the motor.
- The transmission parameters can be changed by the Digital key pad (sold separately) or RS485 communication.

List of data number related to communications

Parameter: 8000h to 805Fh

Lower 2 figures show parameter number. (e.g.: parameter Pr.10 = database 8010h)

* NAK is answered while the amplifier detects undervoltage error, and change of a parameter and preservation to EEPROM are not performed.
* Please refer to P.42 “The function of parameters” about the contents and the detail function of a parameter.
* Please do not perform data communications to any addresses (parameter) other than the address mentioned in this specifications.

- Time required for data transmission per byte is calculated by the following formula for example in the case of 9600 [bps], 8 bits, parity present (even number or odd number), and stop bit 1:
  (1000 / 9600) × (1 + 8 + 1 + 1) = 1.14 [ms/byte]
  Time is 4.58 [ms/byte] for 2400 [bps], and 2.29 [ms/byte] for 4800 [bps].
  Note, however, actual communication time will be added time necessary for processing received command, and switching between a line and transmission/reception control.

Address	Pr No. *1	Parameter name	Data value	Default	Upper limit	Lower limit	Note
8000h	0	Internal speed (0th speed)	0 to “803Bh: Upper speed limit”	0000h (0)	*2	0000h (0)	
8001h	1	1st speed		0BB8h (3000)	*2	0000h (0)	
8002h	2	2nd speed		04B0h (1200)	*2	0000h (0)	
8003h	3	3rd speed		0258h (600)	*2	0000h (0)	
8004h to 8007h	4 to 7	4th speed to 7th speed		0000h (0)	*2	0000h (0)	

*1) Pr No. shows the parameter number in Digital key pad.

*2) Upper limit is dependent on “803Bh: Upper speed limit”. It is restricted by the value of “803Bh: Upper speed limit” when the value exceeding “803Bh: Upper speed limit” is set.

Address	Pr No. *1	Parameter name	Data value	Default	Upper limit	Lower limit	Note
8010h	10	1st acceleration time	1 to 30000 (0.01 s) 1 to 299: input value: it remains as it is (0.01 s above - less than 3 s) 300 to 2999: Lower 1-figure omission (3 s above - less than 30 s) 3000 to 30000: Lower 2-figure omission (30 s above - 300 s or less) e.g.) input value: 100 (1.00 s) → 100 (1.00 s) 555 (5.55 s) → 550 (5.50 s) 3678 (36.78 s) → 3600 (36.00 s)	001Eh (0.3 s)	7530h (300 s)	0001h (0.01 s)	*3
8011h	11	2nd acceleration time		001Eh (0.3 s)	7530h (300 s)	0001h (0.01 s)	*3
8012h	12	1st deceleration time		001Eh (0.3 s)	7530h (300 s)	0001h (0.01 s)	*3
8013h	13	2nd deceleration time		001Eh (0.3 s)	7530h (300 s)	0001h (0.01 s)	*3
8014h	14	Acceleration mode selection	0: Linear 1: S shape-1 2: S shape-2	0000h	0002h	0000h	
8015h	15	Deceleration mode selection		0000h			
8016h	16	Stop mode selection	0: Free-run stop 1: Speed reduction stop	0001h	0001h	0000h	
8017h	17	Free-run waiting time	0 to 100 (0.1 s)	000Ah	0064h	0000h	
801Ah	1A	Velocity loop proportional gain	0 to 10000	0190h	2710h	0000h	
801Bh	1b	Velocity loop integration gain	0 to 10000	01F4h	2710h	0000h	
8030h	30	Run command selection	0: Digital key pad 1: Terminal 2: RS485 communication	0001h	0002h	0000h	*4
8031h	31	Speed command selection	0: Digital key pad 1: Vol-A	0001h	0001h	0000h	*4
8032h	32	Operation mode selection	1: 1 speed mode 2: 2 speed mode 3: 4 speed mode 4: 8 speed mode	0001h	0004h	0001h	*4

*1) Pr No. shows the parameter number in Digital key pad.

*3) As for the input value more than 3 second (300), lower 1 figure is omitted. In more than 30 second (3000), lower 2 figures are omitted.

*4) It can change when motor stop. NAK will be returned if it rewrites when motor running. Moreover, since the amplifier is tripped for safety after parameter is changed, when you operate continuously, please transmits the trip reset instructions mentioned later.

Address	Pr No. *1	Parameter name	Data value	Default	Upper limit	Lower limit	Note
8033h	33	I1/I2 function selection	0: I1-CCW run/stop, I2-CW run/stop 1: I1-CW run/stop, I2-CCW run/stop 2: I1-run/stop, I2-CW /CCW direction 3: I1-CCW run/stop, I2-Trip reset 4: I1-CW run/stop, I2-Trip reset	0002h	0004h	0000h	*4
8034h	34	I3 function selection	0: Free run 1: External forced trip 2: 2nd acceleration / deceleration 3: Trip reset	0000h	0003h	0000h	*4
8035h	35	I4 function selection		0003h	0003h	0000h	*4
8036h	36	I5 function selection		0000h	0003h	0000h	*4
803Ah	3A	Lower speed limit	0 to “803Bh: Upper speed limit”	0000h	*2	0000h	*4
803Bh	3b	Upper speed limit	0 to 3000 (r/min)	0BB8h	0BB8h	0000h	*4
803Ch	3C	Torque limit	50 to 150 (%)	0096h	0096h	0000h	
8040h	40	O1 function selection	0: Trip 1: Arriving 2: Running 3: Free-run 4: CCW run 5: CW run 6: Overload detection 7: Speed pulse signal	0000h	0007h	0000h	
8041h	41	O2 function selection		0007h	0007h	0000h	
8042h	42	O1 output polarity selection	0: Normal 1: Reverse	0000h	0001h	0000h	
8043h	43	O2 output polarity selection		0000h	0001h	0000h	
8044h	44	Speed matching range	20 to “803Bh: Upper speed limit”	0032h	*2	0000h	
8045h	45	Output pulse count selection	0: 1, 1: 2, 2: 3, 3: 4, 4: 6, 5: 8, 6: 12, 7: 24	0007h	0007h	0000h	
8046h	46	Monitor mode switching	0: Rotation speed (Actual speed), 1: Torque 2: Load factor 3: Command speed 4: Internal DC voltage	0000h	0004h	0000h	

*1) Pr No. shows the parameter number in Digital key pad.

*2) Upper limit is dependent on “803Bh: Upper speed limit”. It is restricted by the value of “803Bh: Upper speed limit” when the value exceeding “803Bh: Upper speed limit” is set.

*4) It can change when motor stop. NAK will be returned if it rewrites when motor running. Moreover, since the amplifier is tripped for safety after parameter is changed, when you operate continuously, please transmits the trip reset instructions mentioned later.

Communication

Address	Pr No. *1	Parameter name	Data value	Default	Upper limit	Lower limit	Note
8047h	47	Numerator of display magnification factor	0 to “8048h: Denominator of display magnification factor” × 10	0001h	*5	0000h	
8048h	48	Denominator of display magnification factor	0 to 1000	0001h	03E8h	0000h	
804Bh	4b	Trip history 1	0: No history 1: Sensor error 2: Undervoltage 3: Undervoltage 4: Overload 5: Overspeed 8: Overcurrent 9: Overheat 10: External forced trip 12: RS485 communication error 90: User parameter error 91: System parameter error Other numbers: System error	0000h	005Eh	0000h	*6
804Ch	4C	Trip history 2		0000h	005Eh	0000h	*6
804Dh	4d	Trip history 3		0000h	005Eh	0000h	*6
804Eh	4E	Trip history 4		0000h	005Eh	0000h	*6
804Fh	4F	Trip history 5		0000h	005Eh	0000h	*6
8050h	50	Undervoltage trip selection	0: No trip 1: Trip	0000h	0001h	0000h	*4
8051h	51	Retrial selection	0: No retry 1 to 4: Retry count	0000h	0004h	0000h	*4
8052h	52	Retrial start time	1 to 120 (s)	0005h	0078h	0001h	
8054h	54	Parameter initializing	0: No operation 1: Initialize to default	0000h	0001h	0000h	*7

*1) Pr No. shows the parameter number in Digital key pad.

*4) It can change when motor stop. NAK will be returned if it rewrites when motor running. Moreover, since the amplifier is tripped for safety after parameter is changed, when you operate continuously, please transmits the trip reset instructions mentioned later.

*5) Maximum value is dependent on “8048h: Denominator of display magnification factor”. It is restricted by the value of “8048h: Denominator of display magnification factor” × 10 when the value more than “8048h: Denominator of display magnification factor” × 10 is set up.

*6) It can’t be changed, when rewriting is done, NAK is answered. Rewriting returns NAK.

*7) Change this parameter to “1: Initialize to default” and write to EEPROM by $S command. After writing to EEPROM, parameter is initialized when power is turned off once and turned on again after 10 seconds. When writing to EEPROM is not done, parameter is not initialized after power is supplied.

Address	Pr No. *1	Parameter name	Data value	Default	Upper limit	Lower limit	Note
805Ah	5A	RS485 device number	80h to 9Fh	0081h	009Fh	0080h	*8*9
805Bh	5b	RS485 communication speed	0: 2400 bps 1: 4800 bps 2: 9600 bps	0002h	0002h	0000h	*8
805Ch	5C	RS485 communication standard	Set the communication standard of RS485 communication. 0: 8 bits, no parity, stop bit 1 1: 8 bits, no parity, stop bit 2 2: 8 bits, odd number parity, stop bit 1 3: 8 bits, odd number parity, stop bit 2 4: 8 bits, even number parity, stop bit 1 5: 8 bits, even number parity, stop bit 2 6: 7 bits, no parity, stop bit 1 7: 7 bits, no parity, stop bit 2 8: 7 bits, odd number parity, stop bit 1 9: 7 bits, odd number parity, stop bit 2 10: 7 bits, even number parity, stop bit 1 11: 7 bits, even number parity, stop bit 2	0004h	000Bh	0000h	*8
805Dh	5d	RS485 communication response time	10 (ms) to 1000 (1 s)	000Ah	03E8h	000Ah	*8
805Eh	5E	RS485 retry times of communication	0 to 8: Retry count 9: No retry	0009h	0009h	0000h	*8
805Fh	5F	RS485 protocol timeout	1 to 255 (s)	0002h	00FFh	0001h	*8

*1) Pr No. shows the parameter number in Digital key pad.

*8) Change becomes effective, when power is turned off once and turned on again after 10 seconds.

*9) When the device number is set to 80h (128), change of parameter and request for status are ignored, therefore set to 81h (129) to 9Fh (159) normally.

Communication

Transmission sequence

• Handshake code

For line control, following codes are used:

Name	Code	Functions	Description
SOH	01h	Heading start	Start code of communication data, which is followed by address.
STX	02h	Text start	Start code for sending command data.
ETX	03h	Text end	Termination code for command data.
EOT	04h	Transmission end	Sent from the amplifier when transmission message is finished.
ENQ	05h	Request for sending	Inquiry code from host controller to amplifier. The amplifier sends data transmission command when sending data is available, and transmission end command when sending data is not available.
ACK	06h	Positive response	Sent when received message is judged to be normal.
NAK	15h	Negative response	Sent when received message is judged to be abnormal.

• The protocol is compatible with the basic mode data transmission control procedure JISX5002.

• Composition of sent and received data

Shows composition of data transferred on physical phase. There are two transmission patterns available depending on the contents of command.

Request for sending/ Positive response/ Negative response/ Transmission end command (Host→Amplifier, Amplifier→Host)

SOH
Sending address 1
Sending address 2
Senders address 1
Senders address 2
ENQ/ACK/NAK/EOT

<NOTE>
One block in the table represents 1 byte (character).

Data transmission command (Host→Amplifier, Amplifier→Host)

SOH
Sending address 1
Sending address 2
Senders address 1
Senders address 2
STX
Command 1
Command 2
Data number 1
Data number 2
Data number 3
Data number 4
Data 1
Data 2
Data 3
Data 4
ETX
BCC

Sending address: Set the mating device number for sending data in ASCII2 byte.
Host ID 01h (01) to 1Fh (31)
Amplifier ID 80h (128) to 9Fh (159)
When the sending address is set to 80h (128), all connected amplifiers executes the command (only for some commands). However, response is not made from the amplifier

Senders address: Set the address of communication sending source (self) in ASCII 2 bytes.
Host ID 01h (01) to 1Fh (31)
Amplifier ID 81h (129) to 9Fh (159)

Command: Control command (2 bytes)

Data number: Set the data number to be controlled in ASCII 4 bytes.

Data: Set the writing data in ASCII 4 bytes.
When data is minus, it is converted by signed 16 bits.
(e.g. In the case of -10, data is ASCII code of hexadecimal FFF6.)

BCC: :n the case of data transmission command, set XOR (logically inverted) value of each byte from STX to ETX.

• List of commands

Command	Code	Transmission direction	Description
$P	24h 50h	Host → Amplifier	Data writing command. Change of parameter and motor control data. (In changing parameter, parameter is not written to EEPROM.)
$S	24h 53h	Host → Amplifier	Data writing command. Change of parameter and motor control data. (In changing parameter, parameter is written to EEPROM.) * Writing to EEPROM should be requisite minimum. (EEPROM endurance: approx. 100,000 write cycle.)
$R	24h 52h	Amplifier → Host	Data reading request command. Command which requests the parameter, status, and control detail of motor.
#R	23h 52h	Amplifier → Host	Response to data reading request. Returns the parameter, status, and control detail of motor to $R.
#C	23h 43h	Amplifier → Host	Data update request response. Returns the status of amplifier (8103h) to host in response to request for sending command when data of amplifier status (8103h) has changed from previous request for sending.
# I	23h 49h	Amplifier → Host	Initial request response. When the amplifier is powered on, 9999 is sent following # I in response to initial inquiry from host controller (Request for sending).

Communication

• Transmission procedure

$P/$S: Data writing/Parameter writing command

(1) Host → Amplifier (Data writing)

SOH					STX	$	P	*	*	*	*	*	*	*	*	ETX	BCC
	Amplifier ID		Host ID			Command		Data number (parameter address)				Data (parameter value)					

(2) Amplifier → Host (result response)

SOH					ACK
	Host ID		Amplifier ID		

- Answers NAK when requested data number (parameter address) or data value (parameter value) is abnormal. Shows that parameter was properly set only when ACK is answered from the amplifier.
- No result is answered from the amplifier when amplifier ID is 80h (128).

$R: Data reading/Parameter reading command

(1) Host → Amplifier (Data reading request)

SOH					STX	$	R	*	*	*	*	0	0	0	0	ETX	BCC
	Amplifier ID		Host ID			Command		Data number (parameter address)				Data (parameter value)					

- Set data ‘0000’ when executing data reading command.
- When amplifier ID is 80h (128), data reading/parameter reading command is ignored.

(2) Amplifier → Host (Result response)

SOH					ACK
	Host ID		Amplifier ID		

(3) Host → Amplifier (Request for sending)

SOH					ENQ
	Amplifier ID		Host ID		

(4) Amplifier → Host (Response of data)

SOH					STX	#	R	*	*	*	*	*	*	*	*	ETX	BCC
	Host ID		Amplifier ID			Command		Data number (parameter address)				Reading data (parameter value)					

- Response data when amplifier is powered on is initial request response.
- When requested data number (parameter address) is abnormal, ‘0000’ as reading data
- Please use reading data after checking a data number (parameter number)

(5) Host → Amplifier (Result response)

SOH					ACK
	Amplifier ID		Host ID		

(6) Amplifier → Host (Communication completion response)

SOH					EOT
	Host ID		Amplifier ID		

ENQ: Request for sending

When request for sending is sent to the amplifier, response data changes depending on the status of amplifier. Response data is returned in the priority order below:

1	When amplifier is powered on	Initial request response is answered.
2	When receiving data reading / parameter reading	Refer to data reading command processing.
3	When the status of amplifier changes	Data update request is answered.
4	Other cases than the above	Communication completion response is answered.

- Initial request response is answered to the initial data request for sending after the amplifier is powered on.
- When the amplifier ID is 80h (128), request for sending to the amplifier is ignored.

1. When the amplifier is powered on

(1) Host → Amplifier (Request for sending)

SOH					ENQ
	Amplifier ID		Host ID		

(2) Amplifier → Host (Request of data)

SOH					STX	#	I	9	9	9	9	0	0	0	0	ETX	BCC
	Host ID		Amplifier ID			Command		Data number				Reading data					

(3) Host → Amplifier (Response of result)

SOH					ACK
	Amplifier ID		Host ID		

(4) Amplifier → Host (Communication completion response)

SOH					EOT
	Host ID		Amplifier ID		

- When initial response is confirmed, write parameters as necessary.

2. When receiving data reading / parameter reading

See “$R: Data reading/Parameter reading command” on P.62.

3. When the status of amplifier changes

(1) Host → Amplifier (Request for sending)

SOH					ENQ
	Amplifier ID		Host ID		

(2) Amplifier → Host (Request of data)

SOH					STX	#	C	8	1	0	3	*	*	*	*	ETX	BCC
	Host ID		Amplifier ID			Command		Data number				Reading data					

(3) Host → Amplifier (Response of result)

SOH					ACK
	Amplifier ID		Host ID		

(4) Amplifier → Host (Communication completion response)

SOH					EOT
	Host ID		Amplifier ID		

- The amplifier saves the status when executing request for sending, and emits the above response when the status in receiving the next request for sending has changed. Read data is the same as in reading data number 8103h.
- When the amplifier is powered on, in the case where request for sending is sent continuously, data update request response is answered after initial request response is made.

4. Cases other than the above

(1) Host → Amplifier (Request for sending)

SOH					ENQ
	Amplifier ID		Host ID		

(2) Amplifier → Host (Communication completion response)

SOH					EOT
	Host ID		Amplifier ID		

- The amplifier makes communication completion response because data is not requested from the host, and the status of amplifier has not changed.

Example of data communication

• When power is turned on

Communication data is shown below in chronological order when request for sending is executed in power-on for the amplifier. Initial request response at the first, and then data update request response is answered from the amplifier. Then, if the status of amplifier has not changed, only transmission completion response is answered. Shown below is the status where the amplifier is connected with host ID = 01h (1), amplifier ID = 81h (129). It is represented by ASCII characters. (Data in the parenthesis is hexadecimal ASCII code.)

(1) Request for sending

Host →

SOH (01h)	8 (38h)	1 (31h)	0 (30h)	1 (31h)	ENQ (05h)

(2) Initial request response

Amplifier ←

SOH (01h)	0 (30h)	1 (31h)	8 (38h)	1 (31h)	STX (02h)	# (23h)

Host →

SOH (01)	8 (38)

Amplifier ←

I (49h)	9 (39h)	9 (39h)	9 (39h)	9 (39h)	0 (30h)	0 (30h)	0 (30h)	0 (30h)	ETX (03h)	BCC (6Bh)

Host →

1 (31h)	0 (30h)	1 (31h)	ACK (06h)

Amplifier ←

SOH (01h)	0 (30h)	1 (31h)	8 (38h)	1 (31h)	EOT (04h)

(3) Request for sending

Host →

SOH (01h)	8 (38h)	1 (31h)	0 (30h)	1 (31h)	ENQ (05h)

(4) Data update request response

Amplifier ←

SOH (01h)	0 (30h)	1 (31h)	8 (38h)	1 (31h)	STX (02h)	# (23h)

Host →

SOH (01)	8 (38)

Amplifier ←

C (43h)	8 (38h)	1 (31h)	0 (30h)	3 (33h)	0 (30h)	0 (30h)	0 (30h)	2 (32h)	ETX (03h)	BCC (69h)

Host →

1 (31h)	0 (30h)	1 (31h)	ACK (06h)

Amplifier ←

SOH (01h)	0 (30h)	1 (31h)	8 (38h)	1 (31h)	EOT (04h)

(5) Request for sending

Host →

SOH (01h)	8 (38h)	1 (31h)	0 (30h)	1 (31h)	ENQ (05h)

(6) Transmission completion response

Amplifier ←

SOH (01h)	0 (30h)	1 (31h)	8 (38h)	1 (31h)	EOT (04h)

• Example of trip reset

Shown below is communication data in chronological order when executing trip reset. This is an example where trip reset of all amplifiers connected by host ID = 01h (1).
Data is represented by ASCII character. (Data in parenthesis is hexadecimal ASCII code.)

Host →

SOH (01h)	8 (38h)	0 (30h)	0 (30h)	1 (31h)	STX (02h)	$ (24h)	P (50h)	8 (38h)	1 (31h)	9 (39h)	0 (30h)	0 (30h)

Amplifier ←

Host →

0 (30h)	0 (30h)	1 (31h)	ETX (03h)	BCC (74h)

Amplifier ←

• There is no response from the amplifier because amplifier ID is set at 80h (128).

• Example of changing parameter (writing data)

Shown below is communication data in chronological order when changing parameter (not written to EEPROM).
This is an example of changing Pr00 (8000h) “The 1st target position (rotation number)” to 10 (0000Ah) with amplifier connected by host ID = 01h (1) and amplifier ID = 81h (129).
Data is represented by ASCII character. (Data in parenthesis is hexadecimal ASCII code.)

Host →

SOH (01h)	8 (38h)	1 (31h)	0 (30h)	1 (31h)	STX (02h)	$ (24h)	P (50h)	8 (38h)	0 (30h)	0 (30h)	0 (30h)	0 (30h)

Amplifier ←

Host →

0 (30h)	0 (30h)	A (41h)	ETX (03h)	BCC (0Ch)

Amplifier ←

SOH (01h)	0 (30h)	1 (31h)	8 (38h)	1 (31h)	ACK (06h)

• Example of reading parameter (reading data)

In reading data, reading request is emitted to the amplifier, and then request for sending command is issued.
This is an example of reading Pr40 (8040h) “Output signal 1 selection” with the amplifier connected by host ID = 01h (1) and amplifier ID = 81h (129).Data is represented by ASCII character. (Data in parenthesis is hexadecimal ASCII code.)

(1) Parameter reading request

Host →

SOH (01h)	8 (38h)	1 (31h)	0 (30h)	1 (31h)	STX (02h)	$ (24h)	R (52h)	8 (38h)	0 (30h)	4 (34h)	0 (30h)	0 (30h)

Amplifier ←

Host →

0 (30h)	0 (30h)	0 (30h)	ETX (03h)	BCC (7Bh)

Amplifier ←

SOH (01h)	0 (30h)	1 (31h)	8 (38h)	1 (31h)	ACK (06h)

(2) Request for sending

Host →

SOH (01h)	8 (38h)	1 (31h)	0 (30h)	1 (31h)	ENQ (05h)

Amplifier ←

SOH (01h)	0 (30h)	1 (31h)	8 (38h)	1 (31h)	STX (02h)	# (23h)

Host →

SOH (01)	8 (38)

Amplifier ←

R (52h)	8 (38h)	0 (30h)	4 (34h)	0 (30h)	0 (30h)	0 (30h)	0 (30h)	1 (31h)	ETX (03h)	BCC (7Dh)

Host →

1 (31h)	0 (30h)	1 (31h)	ACK (06h)

Amplifier ←

SOH (01h)	0 (30h)	1 (31h)	8 (38h)	1 (31h)	EOT (04h)

Communication

Communication timing

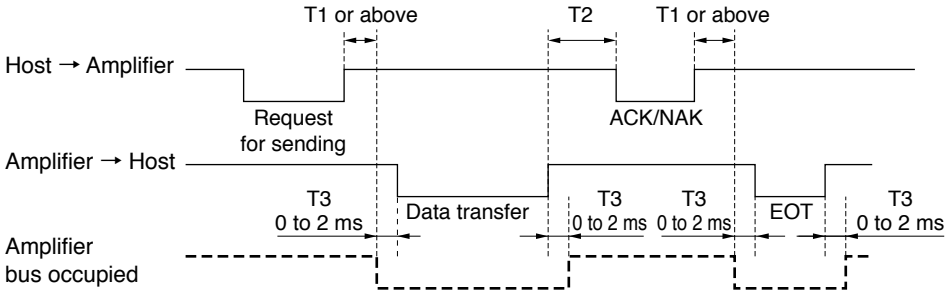

Symbol	Name	Value
T1	Communication response time (Amplifier)	Set by **Pr5d**.
T2	Communication response time (Host)	Take interval 10 ms or longer.
T3	Data emitting time from amplifier to host after bus is	0 to 2 ms

<Information>

(1) Time is counted from the rising edge of stop bit.

(2) Time allowed from receiving one character code until receiving the next character code can be set by **Pr5F** “Protocol timeout”. If the next normal character code cannot be received within the time set by this parameter, the amplifier detects communication timeout and received data is canceled. If communication timeout is detected continuously, and the number of detections exceeds the number of retrials (**Pr5E**), the amplifier trips because of RS485 communication error.

(3) When the host sends data and still does not receive any response from the amplifier, communication error may be present through effect of noise, etc. In this case, the host should send data again after time set by **Pr5F** “Protocol timeout”.

<Communication establishing time when power is turned on>

Establishment communication takes about 800 ms when the amplifier is powered on. The amplifier does not make response in the meantime, therefore allow waiting time longer than a second.

[Timing in power-on]

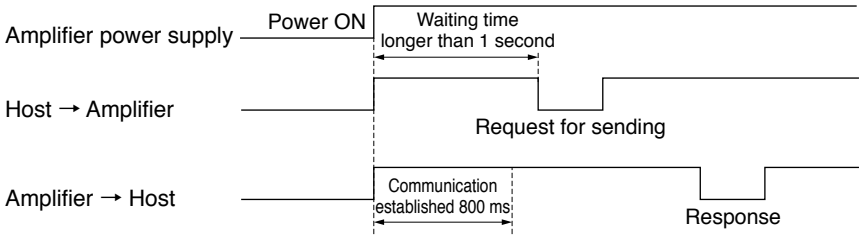

Communication command

Data number	Applicable command on host side	Description
8000h to 805Fh	$P/$S/$R	Parameter
8103h	$R	Amplifier status
8104h	$R	Model code 1
8105h	$R	Model code 2
8110h	$R	Rotation speed (actual speed)
8111h	$R	Commanded speed
8112h	$R	Internal DC voltage
8113h	$R	Torque
8114h	$R	Load factor
8120h	$R	Detail of trip
8130h	$R	Input terminal status
8131h	$R	Output terminal status
8180h	$P/$S	Run command
8181h	$P/$S	Free-run stop command
8190h	$P/$S	Trip reset
8191h	$P/$S	Forced trip
8192h	$P/$S	Trip history clear
81B0h	$P/$S	Parameter EEPROM writing

Communication command in detail

8000h to 805Fh: Parameter

• $P: Parameter writing command (Without EEPROM writing function)

Host → Amplifier (Data writing)

SOH					STX	$	P	8	0			P1	P2	P3	P4	ETX	BCC
	Amplifier ID		Host ID			Command		Parameter address				Parameter value					

- When the device number set on the amplifier (value of **Pr5A**) matches with the amplifier ID of received data, parameter change is executed.
- When parameter address and parameter value are abnormal, NAK is answered.
- Set the parameter address at ‘80 □□ ’. (‘805C’ for **Pr5C**)
- Set the parameter value in 4 digits of ASCII code (P1, P2, P3, and P4) which is obtained by conversion from the data to hexadecimal.
  (e.g. 100 = ‘0064’, –100 = ‘FF9C’)
- NAK is answered while the amplifier detects undervoltage error, and the parameter is not changed.
- Changed parameter is not written to EEPROM by this command. In order to make changed parameter still effective after power resetting, execute EEPROM writing command by data number 81B0h.
- When run command is executed by I/O while parameter is being written by communication at the same time, enter the run command after receiving ACK response from the amplifier. The amplifier runs per the written parameter.

• $S: Parameter writing command (with EEPROM writing function)

Received data (Host → Amplifier)

SOH					STX	$	S	8	0			P1	P2	P3	P4	ETX	BCC
	Amplifier ID		Host ID			Command		Parameter address				Parameter value					

- When the device number set on the amplifier (value of **Pr5A**) matches with the amplifier ID of received data, parameter change is executed.
- When parameter address and parameter value are abnormal, NAK is answered.
- Set the parameter address at '80 □□ '. ('805C' for **Pr5C**)
- Set the parameter value in 4 digits of ASCII code (P1, P2, P3, and P4) which is obtained by conversion from the data to hexadecimal.
  (e.g. 100 = '0064', –100 = 'FF9C')
- NAK is answered while the amplifier detects undervoltage error, and the parameter is not changed.
- Changed parameter is written to EEPROM by this command. Response may take some time since EEPROM writing process is required.
- When run command is executed by I/O while parameter is being written by communication at the same time, enter the run command after receiving ACK response from the amplifier. The motor runs per the written parameter.
- Writing to EEPROM should be requisite minimum.
  (EEPROM endurance: approx. 100,000 write cycle.)

• $R: Parameter reading request command

Received data (Host → Amplifier)

SOH					STX	$	R	8	0			0	0	0	0	ETX	BCC
	Amplifier ID		Host ID			Command		Parameter address				Parameter value					

- Set the parameter address at '80 □□ '. ('805C' for **Pr5C**). Set the parameter value at '0000'.
- Enter request for sending after execution of this command, parameter value is responded.

• #R: Parameter response command

Transmission data (Amplifier → Host)

SOH					STX	#	R	8	0			P1	P2	P3	P4	ETX	BCC
	Host ID		Amplifier ID			Command		Parameter address				Parameter value					

- When requested parameter address is abnormal, '0000' as parameter value is answered. You should check parameter address as you requested.
- When the parameter reading request command is normally completed, the amplifier answers a parameter value when it receives request for sending.
- Parameter address which is read out is sent by '80 □□ '.
- Parameter value is sent in 4 digits of ASCII code (P1, P2, P3, and P4) which is obtained by conversion from the data to hexadecimal.
  (e.g. 100 = '0064', –100 = 'FF9C')

8103h: Amplifier status

• $R: Status reading request command

Received data (Host → Amplifier)

SOH					STX	$	R	8	1	0	3	0	0	0	0	ETX	BCC
	Amplifier ID		Host ID			Command		Data number				Data value					

- Enter request for sending after execution of this command, the amplifier status is answered.
- Set '0000' in data value.

• #R: Status response command

Transmission data (Amplifier → Host)

SOH					STX	#	R	8	1	0	3	D1	D2	D3	D4	ETX	BCC
	Host ID		Amplifier ID			Command		Data number				Data value					

- When the amplifier receives request for sending after normal completion of status reading request command, the amplifier answers status value.

• #C: Data updating request command

Transmission data (Amplifier → Host)

SOH					STX	#	C	8	1	0	3	D1	D2	D3	D4	ETX	BCC
	Host ID		Amplifier ID			Command		Data number				Data value					

- The amplifier saves the status in executing request for sending, and makes the response above when the status in receiving the next request for sending has changed. Read data is the same as in execution of data number 8103.

[Detail of status]

	Bit 3	Bit 2	Bit 1	Bit 0
D1	0	0	0	0
D2	0	0	0	0
D3	0	0	0	0
D4	0	Running	Speed attainment	Trip state

Detail above is converted into hexadecimal and represented in ASCII code.
e.g.) Data value = 30h 30h 30h 34h = '0004' = It is shown that it is running.

8104h: Model code 1, 8105h: Model code 2

• $R: Model code reading request command

Received data (Host → Amplifier)

SOH					STX	$	R	8	1	0		0	0	0	0	ETX	BCC
	Amplifier ID		Host ID			Command			Data number				Data value				

- Enter request for sending after execution of this command, model code of amplifier is answered.
- Set ‘0000’ in data value.

• #R: Model code response command

Transmission data (Amplifier → Host)

SOH					STX	#	R	8	1	0		D1	D2	D3	D4	ETX	BCC
	Host ID		Amplifier ID			Command			Data number				Data value				

- When the amplifier receives request for sending after completion of model code reading request command, the model code value is answered.
- Model name of the amplifier is sent in ASCII code of total 8 characters, consisting of 4 characters respectively.
  e.g.) Model code 1 (‘8104’) = 4Dh42h4Dh43h = ‘MBMC’
  Model code 2 (‘8105’) = 33h41h31h45h = ‘3A1E’

8110h: Rotation speed (actual speed), 8111h: Commanded speed

• $R: Speed reading request command

Received data (Host → Amplifier)

SOH					STX	$	R	8	1	1		0	0	0	0	ETX	BCC
	Amplifier ID		Host ID			Command			Data number				Data value				

- Rotation speed of amplifier (actual speed) (‘8110’) and commanded speed (‘8111’) are answered by request for sending after execution of this command.
- Set ‘0000’ in data value.

• #R: Speed response command

Transmission data (Amplifier → Host)

SOH					STX	#	R	8	1	1		D1	D2	D3	D4	ETX	BCC
	Host ID		Amplifier ID			Command			Data number				Data value				

- When the amplifier receives request for sending after normal completion of speed reading request command, rotation speed value (actual speed value) (‘8110’) and commanded speed value (‘8111’) are answered.
- Data value is answered in rotation speed (actual speed) and commanded speed in [r/min].
  e.g.) Data value = 30h 42h 42h 38h = ‘0BBB’ = 3000 [r/min]
  Data value = 30h 35h 44h 43h = ‘05DC’ = 1500 [r/min]
  The value shall be positive at CCW rotation and negative at CW rotation.

8112h: Internal DC voltage

• $R: Internal DC voltage reading request command

Received data (Host → Amplifier)

SOH					STX	$	R	8	1	1	2	0	0	0	0	ETX	BCC
	Amplifier ID		Host ID			Command			Data number				Data value				

- Enter request for sending after execution of this command, the internal DC voltage (voltage in smoothing capacitor of power supply) of the amplifier is answered.
- Set ‘0000’ in data value.

• #R: Internal DC voltage response command

Transmission data (Amplifier → Host)

SOH					STX	#	R	8	1	1	2	D1	D2	D3	D4	ETX	BCC
	Host ID		Amplifier ID			Command			Data number				Data value				

- When the amplifier receives request for sending after normal completion of internal DC voltage reading command, internal DC voltage (voltage in smoothing capacitor of power supply) is answered.
- Voltage of amplifier is answered in [V] for data value.
  e.g.) Data value = 30h 31h 31h 38h = ‘0118’ = 280 [V]

8113h: Torque 8114h: Load factor

• $R: Torque reading request command

Received data (Host → Amplifier)

SOH					STX	$	R	8	1	1		0	0	0	0	ETX	BCC
	Amplifier ID		Host ID			Command			Data number				Data value				

- Enter request for sending after execution of this command, torque of amplifier (‘8113’) and load factor (‘8114’) are answered.
- Set ‘0000’ in data value.

• #R: Torque response command

Transmission data (Amplifier → Host)

SOH					STX	#	R	8	1	1		D1	D2	D3	D4	ETX	BCC
	Host ID		Amplifier ID			Command			Data number				Data value				

- When the amplifier receives request for sending after normal completion of torque reading request command, torque (‘8113’) and load factor (‘8114’) are answered.
- Torque of amplifier/Load factor multiplied by 10 is answered in [%] for data value.
  e.g.) Data value = 30h 31h 32h 43h = ‘012C’ = 30.0 [%]

8120h: Detail of trip

• $R: Trip detail reading request command

Received data (Host → Amplifier)

SOH					STX	$	R	8	1	2	0	0	0	0	0	ETX	BCC
	Amplifier ID		Host ID			Command			Data number			Data value					

- Enter request for sending after execution of this command, the detail of trip is answered.
- Set ‘0000’ in data value.

• #R: Trip detail response command

Transmission data (Amplifier → Host)

SOH					STX	#	R	8	1	2	0	D1	D2	D3	D4	ETX	BCC
	Host ID		Amplifier ID			Command			Data number			Data value					

- When the amplifier receives request for sending after normal completion of trip detail reading request command, detail of amplifier trip is answered.
- Detail of trip is answered by trip number. (See the list of protective functions on P.24.)
  When the trip number is 0, it indicates that no tripping has occurred.
  e.g.) Data value = 30h 30h 30h 41h = ‘000A’ = 10 = External forced trip
- Trip history can be read out with parameter (**Pr4b** to **4F**).

8130h: Input terminal status

• $R: Input terminal status reading request command

Received data (Host → Amplifier)

SOH					STX	$	R	8	1	3	0	0	0	0	0	ETX	BCC
	Amplifier ID		Host ID			Command			Data number			Data value					

- Enter request for sending after execution of this command, the status of amplifier input terminal is answered.
- Set ‘0000’ in data value.

• #R: Input terminal status response command

Transmission data (Amplifier → Host)

SOH					STX	#	R	8	1	3	0	D1	D2	D3	D4	ETX	BCC
	Host ID		Amplifier ID			Command			Data number			Data value					

- When the amplifier receives request for sending after normal completion of input terminal status reading request command, the input terminal status of the amplifier is answered.

[Status of input terminal]

	Bit 3	Bit 2	Bit 1	Bit 0
D1	0	0	0	0
D2	0	0	0	0
D3	0	0	0	I5
D4	I4	I3	I2	I1

Detail above is converted into hexadecimal and represented in ASCII code.
e.g.) Data value = 30h 30h 30h 35h = ‘0005’ = Indicates that I1 and I3 are on.

8131h: Output terminal status

• $R: Output terminal status reading request command

Received data (Host → Amplifier)

SOH					STX	$	R	8	1	3	1	0	0	0	0	ETX	BCC
	Amplifier ID		Host ID			Command			Data number				Data value				

- Enter request for sending after execution of this command, the status of amplifier output terminal is answered.
- Set ‘0000’ in data value.

• #R: Output terminal status response command

Transmission data (Amplifier → Host)

SOH					STX	#	R	8	1	3	1	D1	D2	D3	D4	ETX	BCC
	Host ID		Amplifier ID			Command			Data number				Data value				

- When the amplifier receives request for sending after normal completion of output terminal status reading request command, the output terminal status of the amplifier is answered.

[Status of output terminal]

	Bit 3	Bit 2	Bit 1	Bit 0
D1	0	0	0	0
D2	0	0	0	0
D3	0	0	0	0
D4	0	0	O2	O1

Detail above is converted into hexadecimal and represented in ASCII code.
e.g.) Data value = 30h 30h 30h 31h = ‘0001’ = Indicates that O1 is on.

8180h: Run command

• $P/$S: Run command

Received data (Host → Amplifier)

SOH					STX	$	P	8	1	8	0	D1	D2	D3	D4	ETX	BCC
	Amplifier ID		Host ID			Command			Data number				Data value				

- When the amplifier is powered on with Pr30 set at “2” (Command through RS485), this command enables sending run command to the amplifier. At this time, point selection or run command cannot be given through I/O. (See I1/I2 function selection on P.57.) When Pr30 is “1” (command through I/O) and “0” (Digital key pad), run command by this command is ignored.
- When run command is given to the amplifier with this command, first send ‘0000’ as a data value.
- Operation is the same both for $P command and $S command.
- When the amplifier ID is 80h (128), all connected amplifiers execute the command. However, no response is emitted from the amplifier.

[Run command]

	Bit 3	Bit 2	Bit 1	Bit 0
D1	0	0	0	0
D2	0	0	0	0
D3	0	0	0	0
D4	0	0	I2	I1

* When the same signal function is assigned to the signal input I1 and I2, the function is activated as one of the signals is turned ON.

Detail above is converted into hexadecimal and represented in ASCII code.
e.g.) Data value = 30h 30h 30h 31h = ‘0001’ = Input signal I1 is on.

8181h: Free-run stop command

• $P/$S: Free-run stop command

Received data (Host → Amplifier)

SOH					STX	$	P	8	1	8	1	D1	D2	D3	D4	ETX	BCC
	Amplifier ID		Host ID			Command			Data number				Data value				

- When the amplifier is powered on with Pr30 set at “2” (Command through RS485), this command enables sending free-run stop command to the amplifier.
  When Pr30 is “1” (command through I/O) and “0” (Digital key pad), free-run stop command by this command is ignored.
- Operation is the same both for $P command and $S command.
- When the amplifier ID is 80h (128), all connected amplifiers execute the command. However, no response is emitted from the amplifier.
- When data value is other than ‘0000’ and ‘0001’, NAK is answered.
- A motor cannot be driven after free run stop instructions until it transmits operation is possible (free run release).
  e.g.) Data value = 30h 30h 30h 31h = ‘0001’ = Free-run stop command is on.

8190h: Trip reset

• $P/$S: Trip reset command

Received data (Host → Amplifier)

SOH					STX	$	P	8	1	9	0	0	0	0	1	ETX	BCC
	Amplifier ID		Host ID			Command			Data number				Data value				

- When data value is set at ‘0001’ and this command is executed during trip, trip reset is executed.
- When data value is other than ‘0000’ and ‘0001’, NAK is answered.
- Operation is the same for both $P command and $S command.
- This command is incapable of resetting some trips depending on their factor.
  As for tripped condition after executing trip reset command, check it by status reading or trip detail reading command.
- When amplifier ID is set to 80h (128), all connected amplifiers execute the command. However, no response is answered from the amplifier.

8191h: Forced trip

• $P/$S: Forced trip command

Received data (Host → Amplifier)

SOH					STX	$	P	8	1	9	1	0	0	0	1	ETX	BCC
	Amplifier ID		Host ID			Command			Data number				Data value				

- When data value is set to ‘0001’ and this command executed, the amplifier trips (forced trip).
- When data value is other than ‘0000’ and ‘0001’, NAK is answered.
- Operation is the same for both $P command and $S command.
- When amplifier ID is set to 80h (128), all connected amplifiers execute the command. However, no response is answered from the amplifier.

8192h: Clear trip history

• $P/$S: clear trip history

Received data (Host → Amplifier)

SOH					STX	$	P	8	1	9	2	0	0	0	1	ETX	BCC
	Amplifier ID		Host ID			Command			Data number				Data value				

- When data value is set to ‘0001’ and this command executed, trip history is cleared.
- When data value is other than ‘0000’ and ‘0001’, NAK is answered.
- Operation is the same for both $P command and $S command.
- When amplifier ID is set to 80h (128), all connected amplifiers execute the command. However, no response is answered from the amplifier.

81B0h: Parameter EEPROM writing

• $P/$S: Parameter EEPROM writing command

Received data (Host → Amplifier)

SOH					STX	$	P	8	1	B	0	0	0	0	1	ETX	BCC
	Amplifier ID		Host ID			Command			Data number				Data value				

- When data value is set to ‘0001’ and this command executed, parameter is written to EEPROM contained in the amplifier. Response may take some time because EEPROM writing process is executed. Use this command when you want to change the parameter by $P command and make change still effective after power resetting.
- NAK is answered and EEPROM writing process is not executed as long as the amplifier detects undervoltage error.
- When data value is other than ‘0000’ and ‘0001’, NAK is answered.
- Operation is the same for both $P command and $S command.
- When amplifier ID is set to 80h (128), all connected amplifiers execute the command. However, no response is answered from the amplifier.
- Writing to EEPROM should be requisite minimum.
  (EEPROM endurance: approx. 100,000 write cycle.)

Conformance to EC directive and UL standard

EC Directives

The EC directives apply to all such electronic products as those having specific functions and directly sold to general consumers in EU countries. These products are required to meet the EU unified standards and to be furnished with CE marking.
Our brushless motor meet the EC Directives for Low Voltage Equipment so that the machine or equipment comprising our AC servo can meet relevant EC Directives.

EMC Directives

Our brushless motor can meet EMC Directives and related standards. However, to meet these requirements, the systems must be limited with respect to configuration and other aspects, e.g. the installation and some special wiring conditions must be met. This means that in some cases machines and equipment comprising our servo systems may not satisfy the requirements for wiring and grounding conditions specified by the EMC Directives. Therefore, conformance to the EMC Directives (especially the requirements for emission noise and noise terminal voltage) should be examined based on the final products that include our system.

Applicable standard

	Applicable standard		Installation condition
UL	UL1004 UL508C	Standard for electric motor Standard for electric converter equipment	Class I equipment Pollution degree 2 SCCR *1
CSA (c-UL)	C22.2 No.14 C22.2 No.100	Industrial control equipment. Standard for electric motor	
CE	EN61800-5-1 EN60034-1 EN60034-5 EN61800-3 EN55011 EN61000-6-2	Adjustable speed electrical power drive systems – Safety requirements. Electrical, thermal and energy Standard for rotary electric machine (low voltage directive) Standard for rotary electric machine (low voltage directive) Adjustable speed electrical power drive systems – EMC requirements and specific test methods Radio interference wave characteristics of industrial, scientific, and medical high-frequency equipment Standards for immunity in industrial environment (EMC directive)	Overvoltage category II Class I equipment Pollution degree 2
CCC	GB12350	Safety standard for low-power electric motor	
KC	Korea Radio Law *2	Class A Instrument (commercial broadcast communications equipment)	—

*1 SCCR: Symmetrical current 5,000 Arms, Max. 240 V
Motor over-temperature protection is not provided.
Motor over-load-temperature protection shall be provided at the final installation upon required by the NEC (National Electric Code).

*2 Information related to the Korea Radio Law
This brushless amplifier is a Class A commercial broadcasting radio wave generator not designed for home use. The user and dealer should be aware of this fact.

A 급 기기 (업무용 방송통신기자재)
이 기기는 업무용(A 급) 전자파적합기기로서 판매자 또는 사용자는 이 점을 주의하시기 바라며, 가정외의 지역에서 사용하는 것을 목적으로 합니다.

(대상기종 : Brushless Amplifier)

Configuration of peripheral equipment

Power supply	· 100 V system: Single phase 100 V to 120 V ± 10%, 50/60 Hz 200 V system: Single phase 200 V to 240 V ± 10%, 50/60 Hz · Use the equipment under the environment of overvoltage category II specified by IEC60664-1. · In order to obtain overvoltage category III, insert a transformer conforming to EN standard or IEC standard to the input of brushless motor. · Use an electric wire size suitable to EN60204-1.
MCCB (breaker) Fuse	Be sure to connect the specified Molded Case Circuit Breaker (MCCB) certified by IEC and UL, or fuse certified by UL, between power supply and noise filter so that symmetrical current upon short-circuiting of power source will not exceed 5000 Arms. Meeting this condition allows conformance with UL508C (file No. E164620) and UL1004 (file No. E166557).
Noise filter	When installing one noise filter at the power supply for more than one brushless motor used, contact the manufacturer of noise filter.
Surge absorber	Install a surge absorber on the primary side of noise filter. However, in performing the voltage resistance test of machine and equipment, be sure to remove the surge absorber; otherwise, the surge absorber may be ruptured.
Grounding	Be sure to connect the grounding Terminal of brushless amplifier and protective grounding wire (PE) of system for preventing electric shock. Do not tighten the grounding wires together but connect them individually.

Wiring of peripheral equipment

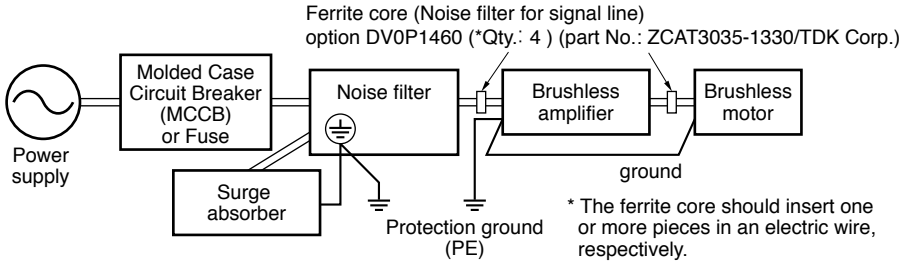

Conformance to EC directive and UL standard

List of compatible peripheral equipment

Part name	Optional parts number (option)	Manufacturer's parts number	Qty.	Manufacturer
Noise filter (single phase 100, 200 V)	DV0P4170	SUP-EK5-ER-6	1	Okaya Electric Industries Co. Ltd.
Noise filter (3-phase)	DV0PM20042	3SUP-HU10-ER-6	1	
Surge absorber (single phase 100, 200 V)	DV0P4190	R·A·V-781BWZ-4	1	
Surge absorber (3-phase)	DV0P1450	R·A·V-781BXZ-4	1	
Noise filter for control signals	DV0P1460	ZCAT3035-1330	4	TDK Corporation

Noise filter

• DV0P4170

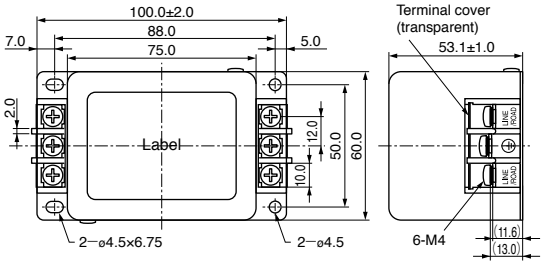

[Unit: mm]

• DV0PM20042

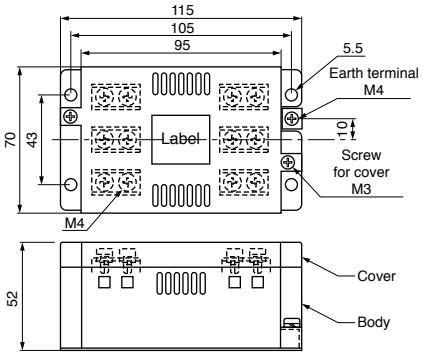

Surge absorber

• DV0P4190

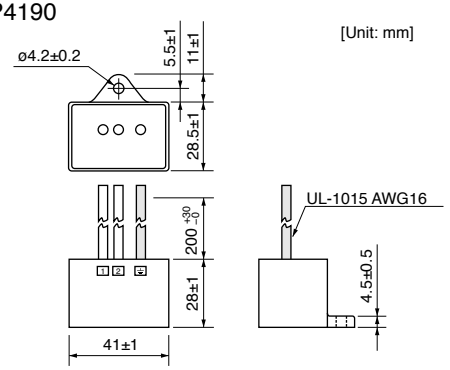

[Unit: mm]

Circuit diagram

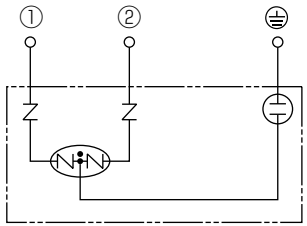

• DV0P1450

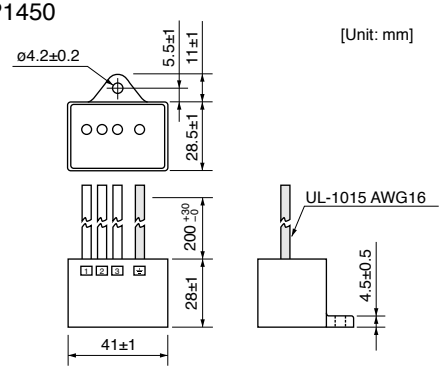

[Unit: mm]

Circuit diagram

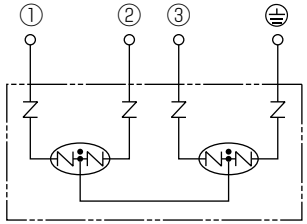

Noise filter for control signals

• DV0P1460

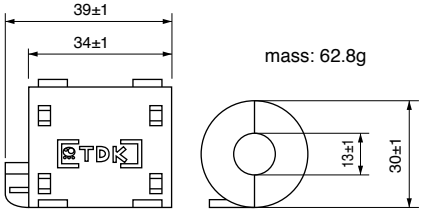

mass: 62.8g

[Unit: mm]

Recommended circuit breaker (MCCB)

Made by Sensata Technologies Japan Limited:

Type IELH-1-11-63-5A-M (single phase) Type IELH-1-111-63-5A-M (3-phase)

(Rated current 5A, cutoff characteristics DELAY63)

• Recommended cutoff characteristics: DELAY61-63

Specifications

• Brushless motor specifications

Item	Specifications					
Flange size	80 mm sq.		90 mm sq.			
Motor model No.	MBMU5AZA○		MBMU9A1A○	MBMU9A2A○	MBMU1E1A○	MBMU1E2A○
Motor rated output (W)	50		90		130	
Voltage	for 100 V/200 V		for 100 V	for 200 V	for 100 V	for 200 V
Rated torque (N·m)	0.16		0.29		0.41	
Starting torque *1 (N·m)	0.24		0.43		0.62	
Rated input current (A(rms))	0.53	0.53	1.00	0.50	1.30	0.72
Moment of inertia of rotor (×10⁻⁴kg·m²)	0.12		0.27		0.36	
Rating	Continuous					
Rated rotation speed *2 (r/min)	3000					
maximum rotation speed (r/min)	4000					
Speed control range (r/min)	30 to 4000					
Axial runout	0.05 mm or less at the position of 3 mm from the shaft end					
Bearing	Ball bearing					
Insulation resistance	Measure the insulation resistance with 500 V Megger. It must be above 20 MΩ Measuring position: Between power input line (L1, L2,L3) and grounding wire					
Isolation voltage	1500 VAC, 1 minute, 10 mA or less (between power and grounding wire)					
Ambient temperature	–10 °C to +40 °C (free from freezing) * Ambient temperature is measured at a distance of 5 cm from the motor.					
Ambient humidity	85% RH or below (free from condensation)					
Altitude	Lower than 1000m					
Vibration	4.9 m/s² or less (10 to 60 Hz) X, Y, Z					
Impact	Lower than 98m/s²					
Motor insulation class	130(B) (UL certified 105 (A))					
Storage temperature	–20˚C to 60˚C (free from condensation) *Extreme temperatures are permissible only for short period such as during transportation.					
Storage humidity	85%RH or below (free from condensation)					
Protection structure	IP65*3					
Number of poles	8					
Motor mass (kg)	0.7		1.0		1.2	

*1 Representative value
*2 Motor shaft speed: to be multiplied by the reduction ratio when the gear head is used.
*3 Excluding the shaft pass-through section and cable end connector.
* Should conform to the test conditions specified in EN standard (EN60529 and EN60034-5). Not suitable for application where watertightness is required over a prolonged period, even if frequently washed.

• Standard characteristics measurement conditions are temperature of 25 °C and relative humidity of 65%, and may be extended to 5 to 35 °C and 45 to 85% RH.

• Brushless amplifier GV series specifications

Item		Specifications								
Basic Specifications	Amplifier model No.	MBEG5A1BCV	MBEG5A5BCV		MBEG9A1BCV	MBEG9A5BCV		MBEG1E1BCV	MBEG1E5BCV	
	Applicable motor model No.	MBMU5AZA○			MBMU9A1A○	MBMU9A2A○		MBMU1E1A○	MBMU1E2A○	
	Motor rated output (W)	50			90			130		
	Input power supply voltage (V)	Single phase 100 to 120	Single phase	3-phase	Single phase 100 to 120	Single phase	3-phase	Single phase 100 to 120	Single phase	3-phase
			200 to 240			200 to 240			200 to 240	
	Frequency (Hz)	50/60								
	Rated input current (A)	1.5	0.7	0.35	2.2	1.1	0.5	2.8	1.5	0.7
	Rated output current (A)	0.6			1.1	0.6		1.7	0.8	
	Voltage tolerance	±10%								
	Control method	Speed control by CS signal Driving system by PWM sine wave								
Ambient conditions	Ambient temperature	0 °C to +50 °C (free from freezing) * Ambient temperature is measured at a distance of 5 cm from the amplifier.								
	Ambient humidity	20% to 85% RH or below (free from condensation)								
	Atmosphere	Indoor (without corrosive gas, dirt, dust, etc.)								
	Altitude	Lower than 1000m								
	Vibration	5.9 m/s² or less (10 to 60 Hz)								
	Storage temperature	–20 ˚C to 60 ˚C (free from condensation) Extreme temperatures are permissible only for short period such as during transportation.								
	Storage humidity	20 to 85%RH or below (free from condensation)								

<Note>
To start/stop the motor, use signal inputs (I1, I2, etc.).
If power is turned on/off to start/stop the motor, the life of the internal circuitry will be shortened.

Specifications

• Brushless Amplifier GV series specifications (continued)

Item			Specifications
Function	Speed setting		Analogue: DC 0 to 5 V, Digital *1
	Speed setting Resolution		Analogue: About 1/ 200 of Upper speed limit Digital: 1 r/min *1
	Speed setting precision (at 20°C)		Analogue: ±3% or below of upper limit speed (±90r/min or below at upper limit speed 3000 r/min) [Digital: 1% or below of upper limit speed] *1
	Acceleration/ Deceleration time		0.01 to 300 sec (Time for changing from 0 to 1000 r/min) *1
	Stopping procedure		Speed reduction stop / Free-run stop *1
	Operation mode		8 speed
	Signal input		5 inputs *2 (run/ stop, CW run/ CCW run, multi function 3 bit)
	Signal output		2 outputs (Open collector) *2 (Trip output etc)
	Communication function via RS485		Setting of parameter, monitoring of control condition and the like are enabled with RS485 interface. Max 31 units.
	Change parameter/ Monitor of condition		Parameter change, status monitor, etc., can be executed through a store-bought PC: (Communication software "PANATERM for BL", Digital key pad connection cable (DV0P383**) and PC connection cable (DV0P4140) are required. The PC should be provided with RS232 port or RS232-USB convertor.)
			Parameter change, status monitor, etc., can be executed through the optional Digital key pad DV0P3510 (sold separately). (Digital key pad connection cable (DV0P383**) (option, sold separately) is required.)
	Speed fluctuation factor	With load	±1% or below (at 0 to Rated torque, Rated rotation speed)
		With voltage	±1 % or below (at supply voltage ±10%, rated rotation speed)
		With temperature	±1% or below (at 0 to 50 °C, rated rotation speed)
	Protective function		Warning : Undervoltage *3 , Overload, setting change. Protect : Undervoltage *3 , Overload, Overcrrent, Overvoltage, Overheat, Overspeed, Sensor error, RS485 error, External forced trip , User parameter error, System parameter error, System error.
	Regenerating brake		Regenerative braking resistor can be externally connected. *4 Instantaneous braking torque 150%, Continuous regenerative ratio 10% (Regenerative operation with which motor shaft is rotated by load, e.g. load lowering operation, should not be continued.)
Performance	Rated rotation speed		3000 r/min
	Speed control range		30 to 4000 r/min (Speed ratio 1:133)
	Allowable motor cable extension length		Up to 10 m (Panasonic option cable)
	Protection level		115%/ Overload protection time characteristics 150% 60 sec
Insulation resistance			Measure the insulation resistance with 500 V Megger. It must be above 20 MΩ. Measuring position: Between power input line (L1, L2, L3) and grounding wire.
Isolation voltage			1500 VAC, 1 minute, 10 mA or less (between power and grounding wire)
Protection structure/ Cooling system			Equivalent to IP20 /Self cooling
Amplifier mass (kg)			0.37

*1 Can be set by using the optional Digital key pad DV0P3510 (sold separately) or PANATERM for BL or through communication over RS485.

*2 Function of signal input and signal output can be changed by using the optional Digital key pad (sold separately) or PANATERM for BL or through communication over RS485.

*3 By using the optional Digital key pad DV0P3510 (sold separately) or PANATERM for BL or through communication over RS485, Undervoltage warning (operation is stopped without trip, and started again as the voltage is recovered) can be changed to Undervoltage error (operation is maintained with trip).

*4 Use the optional external regenerative resistor DV0P2890/DV0PM20068 (100 V/200 V) (sold separately).

• Speed-torque characteristic (Torque in short-time run area is a typical value.)

MBEG5A1BCV／MBMU5AZA○
MBEG5A5BCV／MBMU5AZA○

50 W 100V

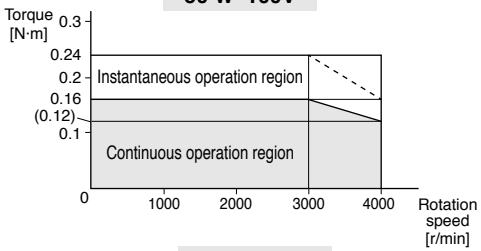

50 W 200V

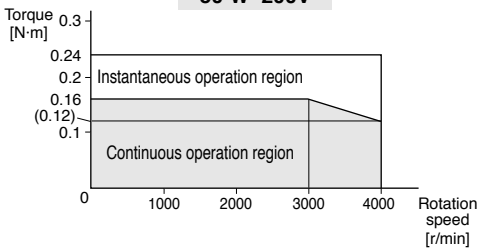

MBEG9A1BCV／MBMU9A1A○
MBEG9A5BCV／MBMU9A2A○

90 W 100V

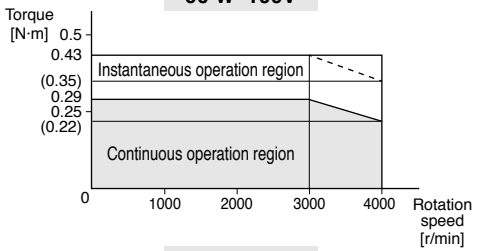

90 W 200V

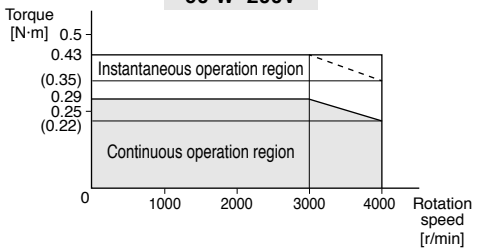

MBEG1E1BCV／MBMU1E1A○
MBEG1E5BCV／MBMU1E2A○

130 W 100V

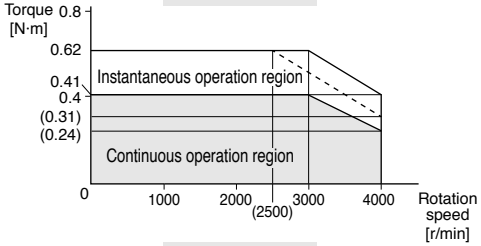

130 W 200V

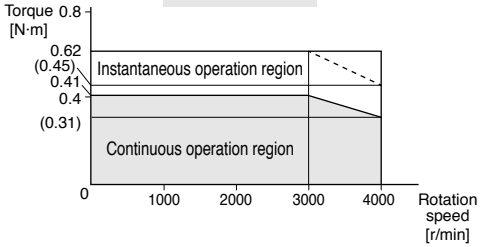

Specifications

Dimensions [Unit: mm]

• Motor

50 W

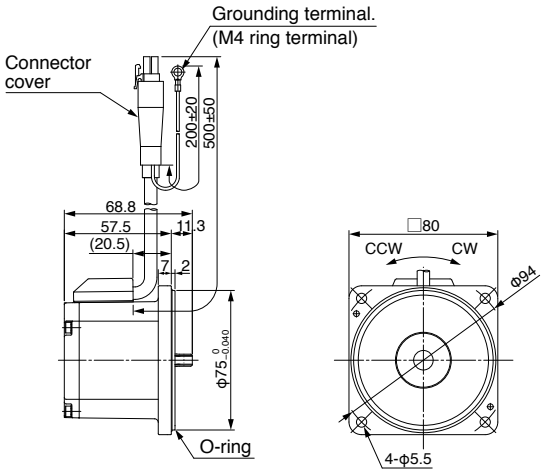

Round shaft type

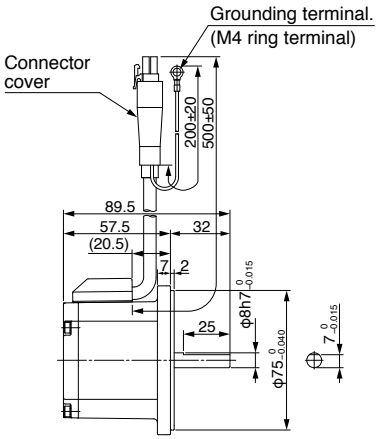

90 W/130 W

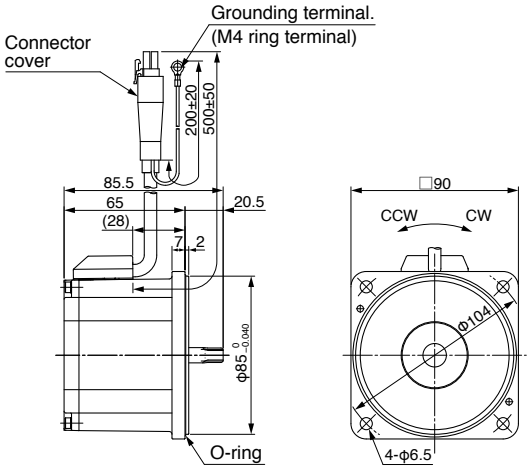

Round shaft type

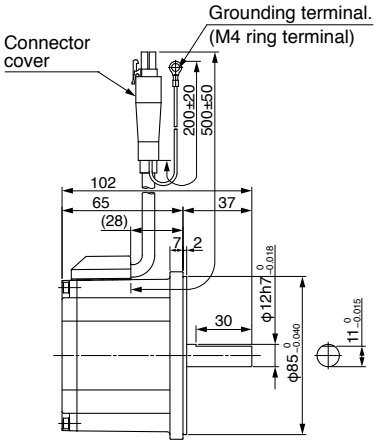

• Gear head

MX8G□B
(for 50W motor, option)
- A figure representing reduction ration in □ .
- Reduction ratio
  3, 3.6, 5, 6, 7.5, 9, 10
  12.5, 15, 18, 20, 25
  30, 36, 50, 60, 75, 90
  100, 120, 150, 180
  22 types

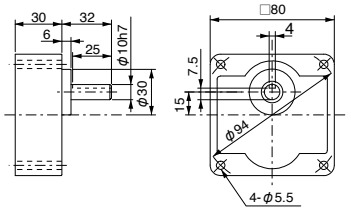

Key and keyway [attachment]

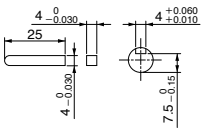

MZ9G□B/MY9G□B
(for 90W,130W motors, option)
- A figure representing reduction ration in □ .
- Reduction ratio
  3, 3.6, 5, 6, 7.5, 9, 10
  12.5, 15, 18, 20, 25
  30, 36, 50, 60, 75, 90
  100, 120, 150, 180, 200
  23 types

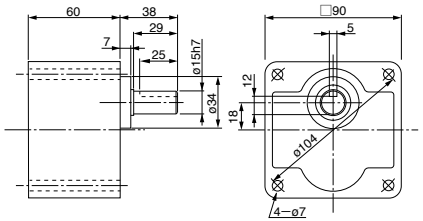

Key and keyway [attachment]

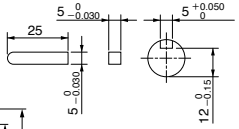

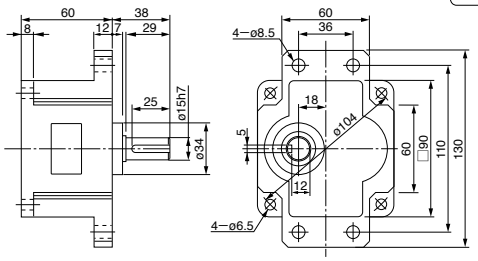

• Brushless Amplifier

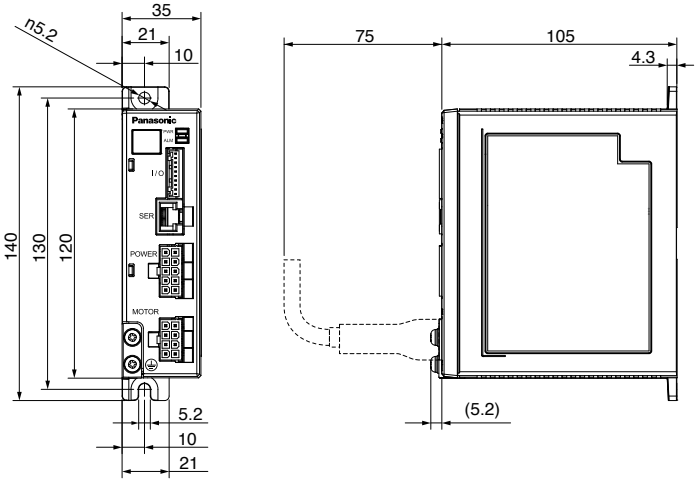

Options

• Console A

DV0P3500

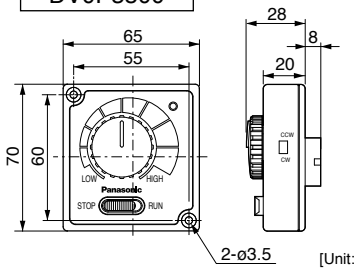

• Digital key pad

DV0P3510

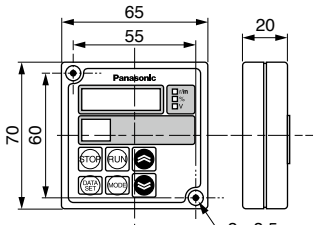

Mounting hole side

(Console A, Digital key pad)

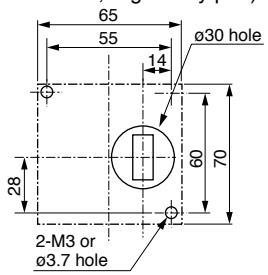

Console A connector terminal symbol

Terminal No.	1	2	3	4	5	6	7	8	9	10
Terminal name	I1	I2	GND	FIN	+5V	—	—	—	—	—

Digital key pad connector terminal symbol

Terminal No.	1	2	3	4	5	6	7	8	9	10
Terminal name	—	—	GND	—	+5V	—	SCK	SIN	SOT	—

Console A, Digital key pad connector pin No.

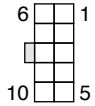

• Console A connection cable

Optional parts number	Length (L)
DV0PM2006910	1 m
DV0PM2006930	3 m
DV0PM2006950	5 m

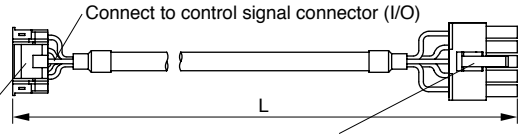

<Control signal connector I/O side> (J.S.T Mfg.Co.,Ltd.)
Housing : PAP-10V-S : PAP-10V-S
Terminal : SPHD-001T-P05

<Console A side connector> (MoleX.)
Housing : 39-01-2105(5557-10R-210)
Terminal : 39-00-0046(5556T2)
or
39-00-0047(5556T2L)

Terminal No. of I/o terminal	1	2	3	4	5	6	7	8	9	10
Lead color of a cable	Brown	Red				Orange	Yellow	Green		
Console A side connector pin No.	1	2	—	—	—	3	4	5	—	—

• Digital key pad connection cable

Optional parts number	Length (L)
DV0P38310	1 m
DV0P38330	3 m
DV0P38350	5 m

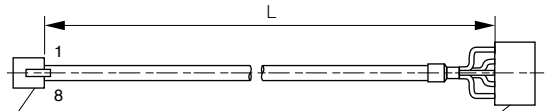

Brushless amplifier side connector (modular plug RJ45)
Connected to (SER)

Terminal No. of SER connector	1	2	3	4	5	6	7	8
Terminal name	—	+5V	SOT	SIN	—	—	GND	SCK
Digital key pad side connector pin No.	—	5	9	8	—	—	3	7

<Digital key pad side connector>
(MoleX.)
Housing : 39-01-2105(5557-10R-210)
Terminal : 39-00-0046(5556T2)
or
39-00-0047(5556T2L)

• Motor extension cable

Optional parts number	Length (L)
DV0PQ1000110	1 m
DV0PQ1000130	3 m
DV0PQ1000150	5 m
DV0PQ10001A1	10 m

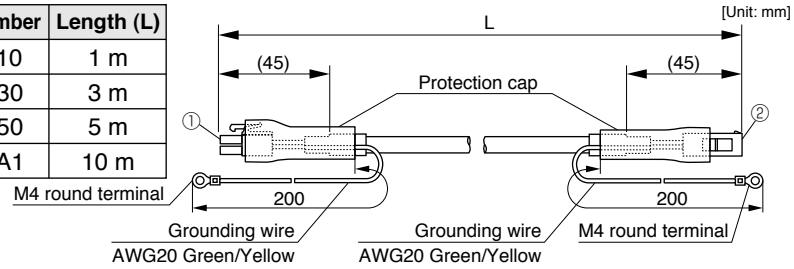

• **Accessories**

- Insulating cap (for grounding wire insulation) 1
- M4 × 6 pan head screw with spring washer 1
- M4 hex. nut 1

Insulating cap
(for grounding wire insulation)

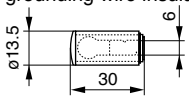

[Unit: mm]

①Brushless amplifier side connector (MoleX.)
Connector : 39-01-2085
Connector pin : 39-00-0038 or 39-00-0039(for AWG 20)
39-00-0046 or 39-00-0047(for AWG 26)

②Motor side connector (MoleX.)
Connector : 39-01-2086
Connector pin : 39-00-0040 or 39-00-0041(for AWG 20)
39-00-0048 or 39-00-0049(for AWG 26)

- When using motor extension cable, be sure to connect its grounding wire to the grounding wire of the motor, and connect the other end of grounding wire of the extension cable to the earth terminal of the brushless amplifier.
  For connecting grounding wire of motor and motor extension cable, use M4 screw and insulating cap supplied as accessories.

• PC connection cable (10-pin D-sub connector pin 1.5 m)

Optional parts number	Length (L)
DV0P4140	1.5 m

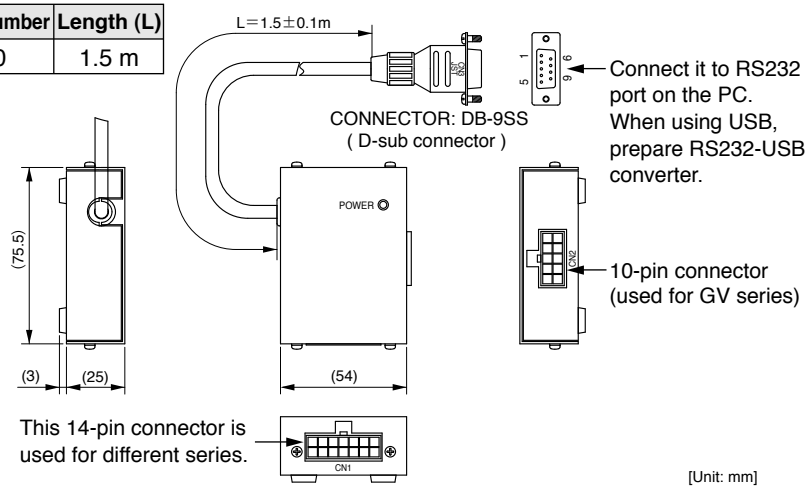

• Communication software "PANATERM for BL"

Can be downloaded from our web site, free of charge.
http://industrial.panasonic.com/ww/i_e/25000/motor_fa_e/motor_fa_e.html

Options

• Power supply connector kit

Optional parts number	Name	Manufacturer's parts No.	Qty.	Manufacturer	Note
DV0P2870	Connector	39-01-2105(5557-10R-210)	1	Molex Inc	Fits to power supply connector (POWER)
	Connector pin	39-00-0060(5556PBTL)	6		

• 39-01-2105（5557-10R-210）

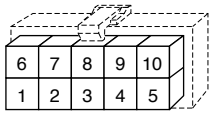

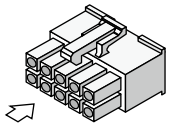

• Control signal cable (Cable with an I/O connector)

Optional parts number	Length (L)
DV0PM20076	2 m

[Unit: mm]

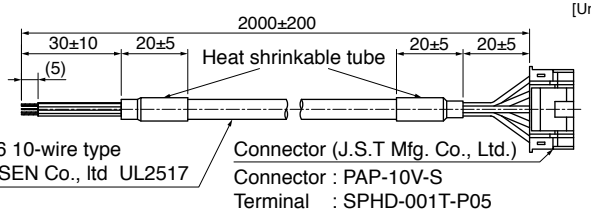

• I/O connector kit

Optional parts number	Name	Manufacturer's parts No.	Qty.	Manufacturer	Note
DV0PM20070	Connector	PAP-10V-S	1	J.S.T Mfg.Co.,Ltd.	Fits to I/O connector
	Connector pin	SPHD-002T-P0.5	10		

• PAP-10V-S

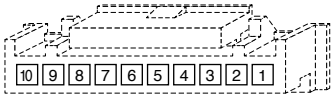

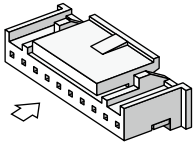

• External speed setter

Optional parts number
DV0PM20078

5 kΩ B characteristic 1/4 W

[Unit: mm]

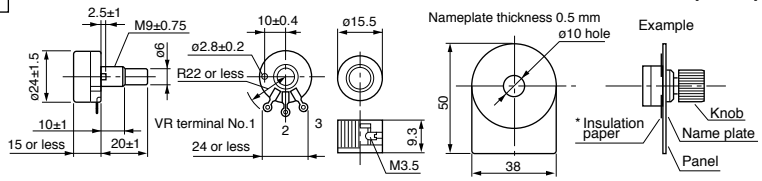

* Insert the insulation paper to positively isolate the terminals and chassis.

• Panel connector kit (Fits to Console A)

Optional parts number	Name	Manufacturer's parts No.	Qty.	Manufacturer	Note
DV0P3610	Connector	39-01-2105(5557-10R-210)	1	Molex Inc	Fits to Console A
	Connector pin	39-00-0047(5556T2L)	10		

• 39-01-2105（5557-10R-210）

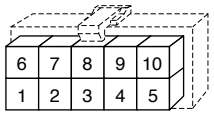

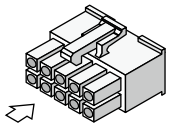

• External regenerative resistor

Optional parts number	Specifications
DV0P2890	100 V, 50 Ω
DV0PM20068	200 V, 200 Ω

• DV0P4190, DV0PM20068

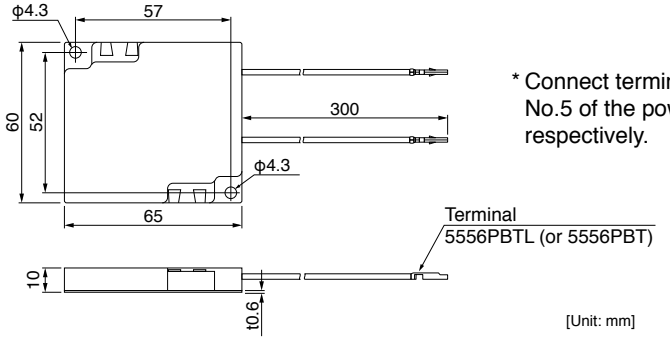

* Connect terminals to pins No.3 and No.5 of the power supply connector, respectively.

[Unit: mm]

Options

• DIN rail attachment unit

Optional parts number
DV0P3811

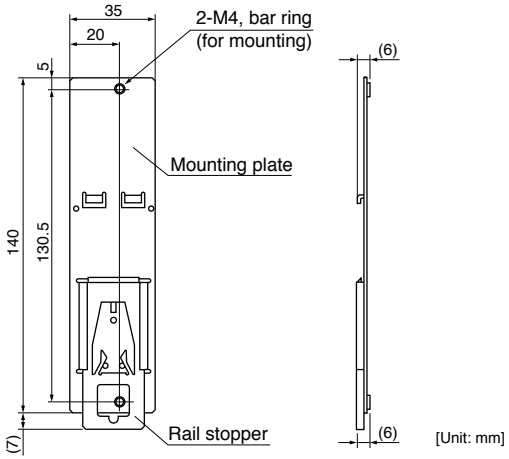

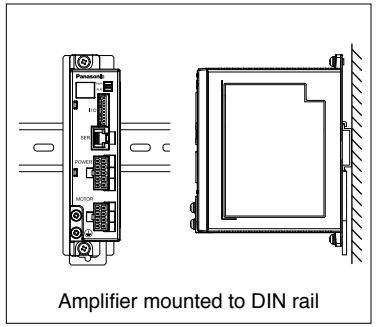

• How to Install

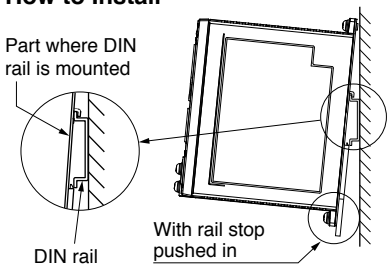

Hook the upper side of DIN rail mounting part on the DIN rail.

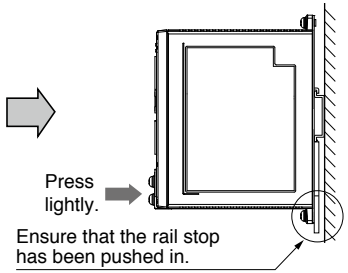

Press lightly the lower part of the main body of amplifier.

• Removing from DIN Rail

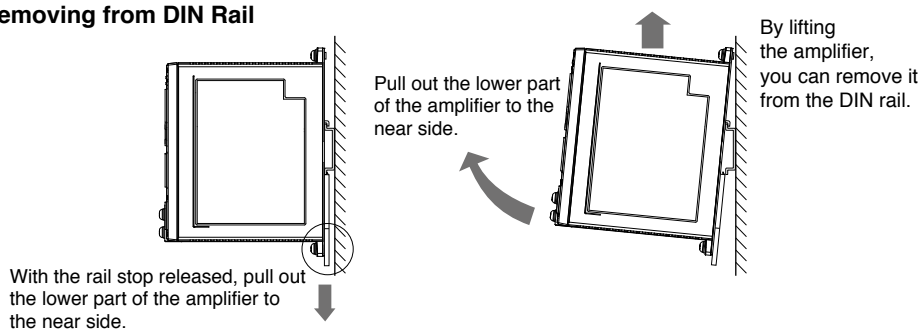

• Reactor

Fig.1(for 3-phase power supply)

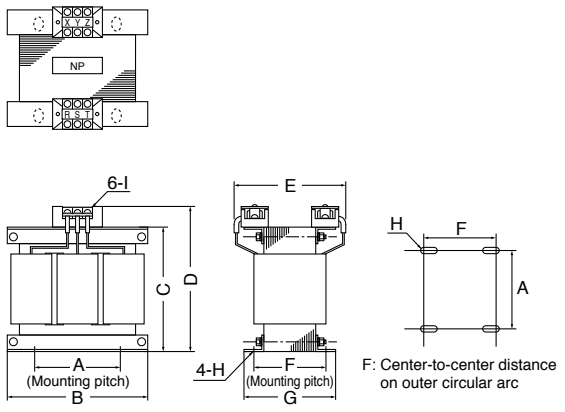

Fig.2 (for single phase power supply)

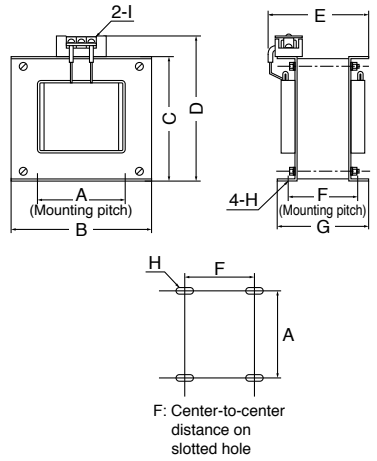

	Optional parts number	A	B	C	D	E (Max)	F	G	H	I	Inductance (mH)	Rated current (A)
Fig.1	**DV0P220**	65±1	125±1	(93)	136Max	155	70+3/–0	85±2	4-7ϕ×12	M4	6.81	3
Fig.2	**DV0P227**	55±0.7	80±1	66.5±1	110Max	90	41±2	55±2	4-5ϕ×10	M4	4.02	5
	DV0P228	55±0.7	80±1	66.5±1	110Max	95	46±2	60±2	4-5ϕ×10	M4	2	8

<Remarks>

When using a reactor, be sure to install one reactor to one brushless amplifier.

Options

List of Peripheral Equipments

Manufacturer	Tel No. / Home Page	Peripheral components
TDK Corporation	+81-3-5201-7229 http://www.tdk.co.jp/	Noise filter for signal lines
Okaya Electric Industries Co. Ltd.	+81-3-4544-7040 http://www.okayatec.co.jp/	Surge absorber Noise filter
Sensata Technologies Japan Limited	+81-49-283-7575 www.sensata.com/japan	Circuit breaker (MCCB)
Japan Molex Inc.	+81-462-65-2313 http://www.molex.co.jp	Connector
J.S.T. Mfg. Co., Ltd.	+81-45-543-1271 http://www.jst-mfg.com/index_i.html	
Iwaki Musen Kenkyusho Co., Ltd.	+81-44-833-4311 http://www.iwakimusen.co.jp/	Regenerative resistor

* This list is for reference only and subject to change without notice.

Cautions for Proper Use

Cautions for Proper Use

- Practical considerations for exporting the product or assembly containing the product
  When the end user of the product or end use of the product is associated with military affair or weapon, its export may be controlled by the Foreign Exchange and Foreign Trade Control Law. Complete review of the product to be exported and export formalities should be practiced.
- Parts are subject to minor change to improve performance.
- This product is intended to be used with a general industrial product, but not designed or manufactured to be used in a machine or system that may cause personal death when it is failed.
- Install a safety equipments or apparatus in your application, when a serious accident or loss of property is expected due to the failure of this product.
- If you are planning to use this product under special environment, such as atomic power control, aerospace equipment, traffic organization, medical equipment, various safety systems, and equipment which requires cleanliness, please contact us.
- We have been making the best effort to ensure the highest quality of the products, however, application of exceptionally larger external noise disturbance and static electricity, or failure in input power, wiring and components may result in unexpected action. It is highly recommended that you make a fail-safe design and secure the safety in the operative range.
- When this product is operated without the shaft electrically grounded, such as in driving the fan, bearing noise may become higher due to the occurence of electrocorrosion depending on the motor used or setting emvironment, so confirm and verify the condition on the customer side in such a case.
- Failure of this product depending on its content, may generate smoke of about one cigarette. Take this into consideration when the application of the machine is clean room related.
- Please be careful when using in an environment with high concentrations of sulphur or sulphuric gases, as sulphuration can lead to disconnection from the chip resistor or a poor contact connection.
- Take care to avoid inputting a supply voltage which significantly exceeds the rated range to the power supply of this product. Failure to heed this caution may result in damage to the internal parts, causing smoking and/or a fire and other trouble.

After-Sale Service (Repair)

Repair

Consult to a dealer from whom you have purchased the product for details of repair. When the product is incorporated to the machine or equipment you have purchased, consult to the manufacuter or the dealer of the machine or equipment.

Technical information

Technical information of this product (Instruction Manual, CAD data) can be downloaded from the following web site.

http://industrial.panasonic.com/ww/i_e/25000/motor_fa_e/motor_fa_e.html

Pursuant to at the directive 2004/108/EC,article 9(2)

Panasonic Testing Centre
Panasonic Marketing Europe GmbH
Winsbergring 15,22525 Hamburg,F.R.Germany

For your records:

The model number and serial number of this product can be found on either the back or the bottom of the unit. Please note them in the space provided and keep for future reference.

Model No.	MBEG □□□ BCV MBMU □□□ A □	**Serial No.**	
Date of purchase			
Dealer	Name		
	Address		
	Phone	( ) -	

Motor Business Unit, Panasonic Corporation
7-1-1 Morofuku, Daito, Osaka, 574-0044, Japan Phone : +81-72-871-1212

「© Panasonic Corporation 2012」

IME40
P0812-0