Panasonic

Technical Instructions
Brushless motor / Brushless amplifier
MINAS-BL GU series

- Thank you very much for your purchase of Panasonic product.
- Please read this instruction manual carefully for proper use.
- In particular, be sure to read Safety precautions (P.2 to P.7) before use for safety.
- Keep this manual with care after reading, and read as necessary.
- This product is for industrial use only and can not be used for other uses eg home use.

- Label of safety precaution is affixed to the product.

Be sure to give this Instruction manual to an end user.

<Contents>

	page
Safety precautions	2
Introduction / Checking the model	8
Checking the model	8
Name of part	10
Installation	12
Caution	15
System configuration and wiring	16
Wiring	18
Test run	24
Checking load and use condition	28
Assembling of gear head	30
Maintenance/ inspections	31
Protective functions	32
How to clear trip	34
Troubleshooting	35
How to use Digital key pad (option)	38
Operating instruction	40
Test run (Digital key pad)	41
How to copy parameter	44
List of parameters (Default)	47
LED display	51
The function of parameters	52
Outline of PANATERM for BL	63
Example of operation pattern	63
Conformance to EC directive and UL standard	64
Specifications	68
Options	74
List of peripheral equipments	78
Cautions for proper use	79
After-sale service (Repair)	Back cover

Safety precautions Important

The following explanations are for things that must be observed in order to prevent harm to people and damage to property.

■ Misuses that could result in harm or damage are shown as follows, classified according to the degree of potential harm or damage.

⚠ **Danger**	Indicates great possibility of death or serious injury.
⚠ **Caution**	Indicates the possibility of injury or property damage.

■ The following indications show things that must be observed.

⃠	Indicates something that must not be done.
❗	Indicates something that must be done.

Safety precaution in transportation and opening package.

⚠ **Danger**		
⃠	Do not carry the motor by holding the cable or the shaft.	Cause of injury
⚠ **Caution**		
❗	Do not drop or topple products.	Preventing damages
	Confirm top and bottom of product before opening package.	Preventing injury, damages
	Please follow instructions of cargo handling label.	Preventing injury, damages

Safety precaution in installation

⚠ **Danger**		
⃠	Do not install the product where vibration or shock exceeds product specifications.	Cause of damages
	Please do not install in environments where foreign matter such as dust, metal powder, oil mist etc. exists.	Cause of fire, damages
	Do not install products in environments where liquids such as water, oil and grinding fluid may adhere.	Cause of electric shock, damages
	Do not install near combustibles. And do not store and install in corrosive gas or flammable gas atmosphere.	Cause of fire, damages
	Do not put your hands in the brushless amplifier.	Cause of burns, damages or electric shocks.
	Do not install near heating element.	Cause of fire, damages

Safety precaution in installation (continued)

⚠ **Danger**		
❗	Install in an environment with pollution degree 2 or pollution degree 1 prescribed in IEC 60664-1.	Preventing fire, electric shock or damages.
	Install on incombustible materials such as metal.	Preventing fire
	Confirm the direction of rotation before installing in the machine.	Preventing injury
	Install an external emergency stop device to shut down the main power source in any emergency.	Preventing injury, fire.
	When used in a clean room or the like, take measures against smoke and dust.	Preventing harm caused by smoke and dust
	Install an overcurrent protection device, an earth leakage circuit breaker, and an overheat prevention device.	Preventing fire, injury, electric shock or damages.
	Be sure to ground the ground wire (terminal) with the specified method.	Preventing electric shock.
	Please install it firmly to prevent fire and injury in case of earthquake.	Preventing fire, injury, electric shock damages or breakage.
	When installing in the vicinity of the vibration source, use a vibration isolator on the mounting surface.	Preventing damages, breakage.
⚠ **Caution**		
⃠	Do not use the product except for specified combination of brushless motor and brushless amplifier.	Cause of damages, breakage.
	Do not use / store in direct sunlight.	Cause of damages, breakage.
	Do not place obstacles that block ventilation around the brushless amplifier.	Cause of damages.
❗	Appropriate installation according to product weight shall be performed.	Preventing damages, breakage.
	Before attaching the motor to the mechanical system, confirm the operation with the motor fixed.	Preventing injury.
	Before turning on the power supply, confirm that the input supply voltage is within the rated range.	Preventing fire, injury, electric shock.
	Please follow the instructions for installation method and installation direction.	Preventing damages.
	Brushless motors and brushless amplifiers generate heat during operation. Even considering this amount of heat, set the ambient temperature measured at the specified point within the allowable ambient temperature range.	Preventing damages.

Safety precautions Important

Safety precaution in installation (continued)

⚠ Caution		
!	Do not drop or topple products.	Preventing damages.
	Set up safety devices against idling and locking of the gear head and grease leakage.	Preventing injury, damage, contamination

Safety precaution in wiring

⚠ Danger		
⊘	Do not scratch the cable, apply excessive force, place heavy objects, or pinch it.	Cause of fire, electric shock damages or breakage.
	Do not use cables when immersed in water or oil.	Cause of fire, electric shock.
	Do not wire with wet hands.	Cause of fire, electric shock.
	Do not connect commercial power directly to brushless motor cables (U, V, W).	Cause of fire, damages or breakage.
!	When inserting the electric wire into a metal duct etc., the allowable electric current of the electric wire is lowered due to the temperature rise, so the electric wire is selected after studying the current reduction coefficient.	Preventing fire, electric shock or damages.
	Wiring has to be carried out by the qualified and authorised specialist.	Preventing fire, injury, electric shock, or breakage.
	Connect cables reliably. Insulate the conductive part with an insulator. And fix the cable so that any stress is not applied to the connection part such as the connector or terminal block.	Preventing fire, electric shock.
	Conductive material such as electric wire scraps should not get inside the product.	Preventing fire, electric shock.
	Turn off the power when wiring or disconnecting wiring.	Preventing electric shock, damages.
	Wire the motor wires (U, V, W) and the CS signal wires correctly.	Preventing injury, damages, or breakage.

⚠ Caution		
!	Commercial power supply should be used for power supply of brushless amplifier.	Preventing damages.
	When connecting the grounding terminal of the extension cable, use a terminal block or an insulation sleeve for insulation.	Preventing electric shock.

Safety precautions during operation

⚠ Danger		
⊘	Do not touch the brushless amplifier or brushless motor as it will be hot.	Cause of burn.
	Do not set very high velocity loop gain, and do not change the velocity loop gain significantly.	Cause of injuries, damages.
	Do not touch the rotating part of the brushless motor during operation.	Cause of injuries.
	Do not operate with wet hands.	Cause of electric shock.
!	While energizing, pay attention to unintentional restart during stop.	Preventing injury.
	Turn on and turn off the power after the worker themself confirms the safety of the surroundings.	Preventing injury.
	Turn off the power when touching the motor connector.	Preventing electric shock.

⚠ Caution		
⊘	Do not constrain the output shaft of the motor.	Cause of damages.
	Do not start / stop the brushless motor frequently using the electromagnetic contactor installed on the main power supply side.	Cause of damages.
	In case of overload, do not start / stop by power on / off.	Cause of damages.
	Do not turn on / off the power frequently.	Cause of damages.
	Do not drive the brushless motor shaft from the outside regardless of whether the power is on or off.	Cause of electric shock, fire or damages.
	Do not approach the parts driven by the brushless motor while the power is on.	Cause of injuries.
!	Brushless motor / brushless amplifier should be used within the operating temperature range and ambient humidity range.	Preventing damages.

Safety precautions Important

Safety precautions during maintenance

⚠ Danger		
!	The inspection work should be done after 15 minutes or more after shutting off the power supply.	Preventing electric shock.
⚠ Caution		
!	Maintenance and inspection should be done by experts.	Preventing injuries, electric shock.
	Turn off the power when not using for a long time.	Preventing injury due to malfunction.
	In order to prevent failure due to capacity reduction of the internal capacitor, replace the product in about 5 years.	Preventing damages.

Safety precautions in case of abnormality

⚠ Danger		
⊘	Do not use damaged products.	Cause of electric shock, injuries, fire or breakage.
!	Turn off the power supply at the time of power failure or when the overheating prevention device is activated.	Preventing injuries, or damages.
	Stop operation by turning off the power immediately when an abnormality occurs.	Preventing injuries, electric shock or fire.
	Trip reset should be carried out after confirming the safety of the people and things around.	Preventing injuries.
	After the earthquake occurrence, it is necessary to confirm the safety.	Preventing injuries, electric shock or fire.
⚠ Caution		
⊘	Do not approach the machine after the power recovery in case of instantaneous power failure, because there is a possibility of a sudden restart.	Cause of injuries.
!	When the protection function is activated, remove the cause and ensure safety before resetting and restarting.	Preventing injuries.

Other safety precautions

⚠ Danger		
⊘	Do not attempt to touch the keyway with bare hands when it is provided on a shaft end of a motor or gear head.	Cause of injuries.
!	Turn off the power when installing, moving, wiring and inspection.	Preventing injuries, electric shock.
	In order to cope with unexpected movements due to unexpected abnormalities, ensure customer safety and safety within the operable range at the operation site.	Preventing injuries.
⚠ Caution		
⊘	Do not use the product except for specifications described in the instruction manual and nameplate	Cause of injuries, electric shock, fire or breakage.
	Do not get on the product. Do not place heavy object on the product.	Cause of injuries, electric shock or damages.
	Do not give strong impact to the product.	Cause of injuries, electric shock, damages or breakage.
	Do not modify, disassemble or repair.	Cause of injuries, electric shock or fire.
!	When disposing of the product, it should be treated as industrial waste.	Reduction of environmental burden.

Introduction/ Checking the model

After unpacking

- Make sure that the model is what you have ordered.
- Check whether the product has been damaged or not during transportation.

If any deficiency should be found,
contact the dealer store where you bought this product.

Checking the model of Amplifier, Motor and Gear head

This amplifier is designed for use in combination with a motor to be specified by us.
Check a name of series, rated output, voltage specifications you wish to use
To prevent damages or malfunctions, you must not use any other combinations than those listed below.

Standard

Shaft type	Voltage	Out put	Amplifier Type	Applicable Motor	Applicable Gear head
Pinion shaft	Single phase AC100 to 120 V	50 W	MBEU5A1AAV	MBMU5AZAX	MX8G □ B * Reduction ratio: 3 to 180
		90 W	MBEU9A1AAV	MBMU9A1AZ	MZ9G □ B * MY9G □ B * Reduction ratio: 3 to 200
		130 W	MBEU1E1AAV	MBMU1E1AZ	
	Single phase/ 3-phase AC200 to 240 V	50 W	MBEU5A5AAV	MBMU5AZAX	MX8G □ B * Reduction ratio: 3 to 180
		90 W	MBEU9A5AAV	MBMU9A2AZ	MZ9G □ B * MY9G □ B * Reduction ratio: 3 to 200
		130 W	MBEU1E5AAV	MBMU1E2AZ	
Round shaft	Single phase AC100 to 120 V	50 W	MBEU5A1AAV	MBMU5AZAS	—
		90 W	MBEU9A1AAV	MBMU9A1AS	
		130 W	MBEU1E1AAV	MBMU1E1AS	
	Single phase/ 3-phase AC200 to 240 V	50 W	MBEU5A5AAV	MBMU5AZAS	
		90 W	MBEU9A5AAV	MBMU9A2AS	
		130 W	MBEU1E5AAV	MBMU1E2AS	

* A figure representing reduction ratio in □
e.g.) Part number of MX type gear head with reduction ratio 10 is MX8G10B.

For special-purpose motor

Voltage	Out put	Amplifier Type	Applicable Motor
Single phase AC100 to 120 V	50 W	MBEU5A1AAV	MBMU5AZA ○ *
	90 W	MBEU9A1AAV	MBMU9A1A ○ *
	130 W	MBEU1E1AAV	MBMU1E1A ○ *
Single phase/ 3-phase AC200 to 240 V	50 W	MBEU5A5AAV	MBMU5AZA ○ *
	90 W	MBEU9A5AAV	MBMU9A2A ○ *
	130 W	MBEU1E5AAV	MBMU1E2A ○ *

The mark " ○ " of the model number of the motor indicates the specification of the motor shaft.

Checking the model

Checking the model of brushless motor

Nameplate

Example of the nameplate

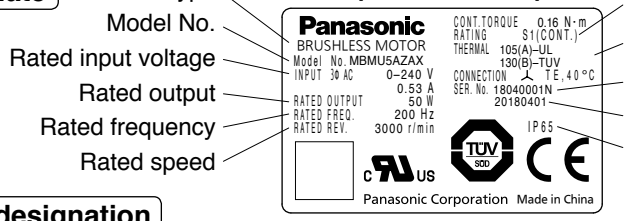

Motor type
Model No.
Rated input voltage
Rated output
Rated frequency
Rated speed
S1: Continuous rating
Thermal class
Serial number
Production date
Protection structure

Model designation

MBMU 5A Z A X

- Type
- Output
  - 5A: 50 W
  - 9A: 90 W
  - 1E: 130 W
- Input power supply
  - 1: 100 V
  - 2: 200 V
  - Z: 100/200 V
- Function
  - A: Standard
- Shaft specification
  - X: For gear head MX8G
  - Z: For gear head MZ9G/MY9G
  - S: Round shaft

Serial number

Example) 18040001 *

- Year of production (Lower 2 digits of AD year)
- Month of production
- Consecutive number

The motor manufactured in Apr. 2018 is given the Serial number 0001.

Production date

Example) 20180401

- Year of production (AD year)
- Month of production
- Day of production

Checking the model of brushless amplifier

Nameplate

Example of the nameplate

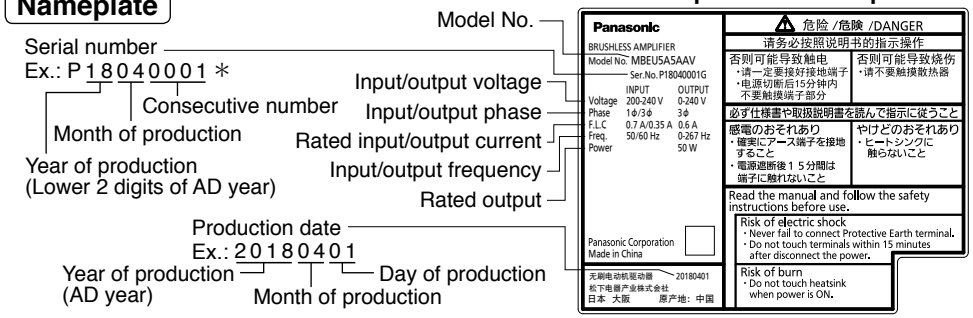

Model No.
Serial number
Ex.: P18040001 *
- Consecutive number
- Month of production
- Year of production (Lower 2 digits of AD year)

Input/output voltage
Input/output phase
Rated input/output current
Input/output frequency
Rated output

Production date
Ex.: 20180401
- Year of production (AD year)
- Month of production
- Day of production

Model designation

MBEU 5A 5 A A V

- Compact geared motor drive GU series
- Output
  - 5A: 50 W
  - 9A: 90 W
  - 1E: 130 W
- Input power supply
  - 1: Single phase AC100 to 120 V
  - 5: Single phase/3-phase AC200 to 240 V
- Function 1 A: Standard
- Function 2 A: Standard (without RS485 communication)
- V: speed control

Name of part

Name of part

Brushless motor

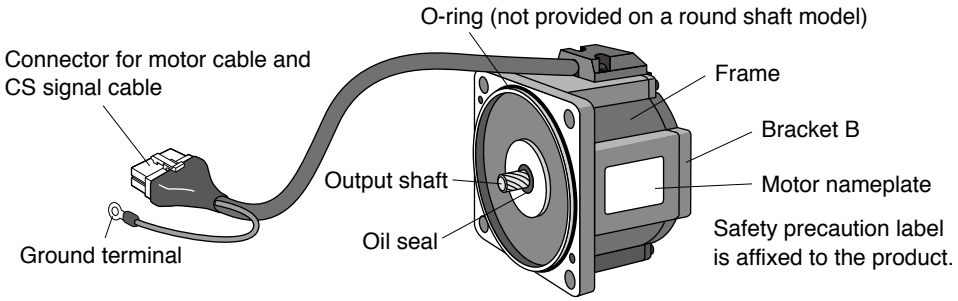

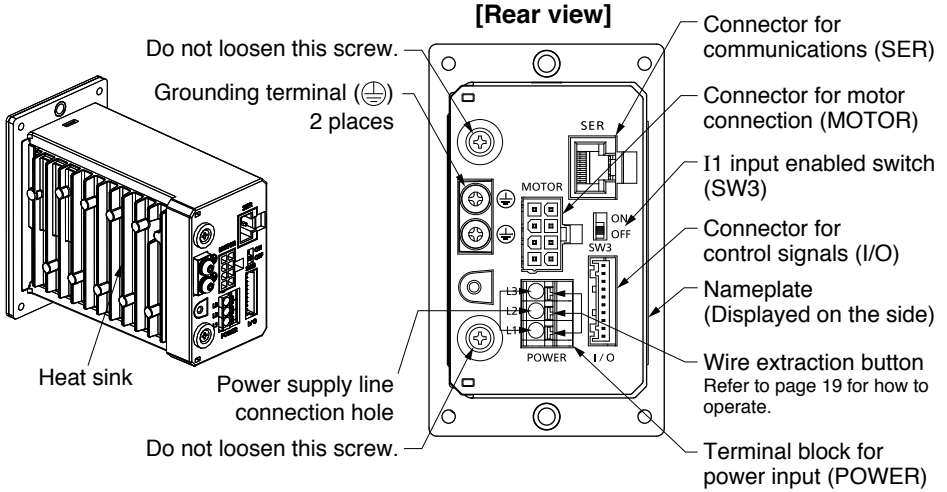

Brushless amplifier

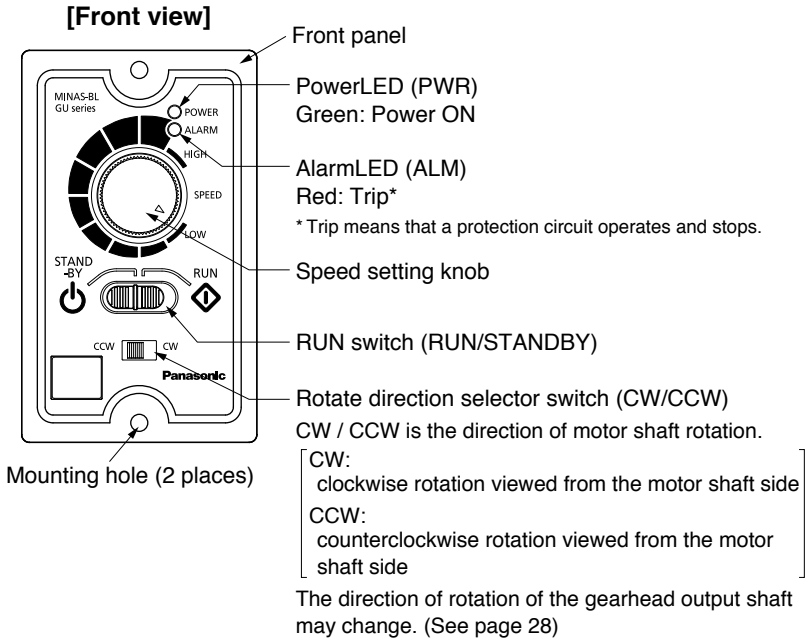

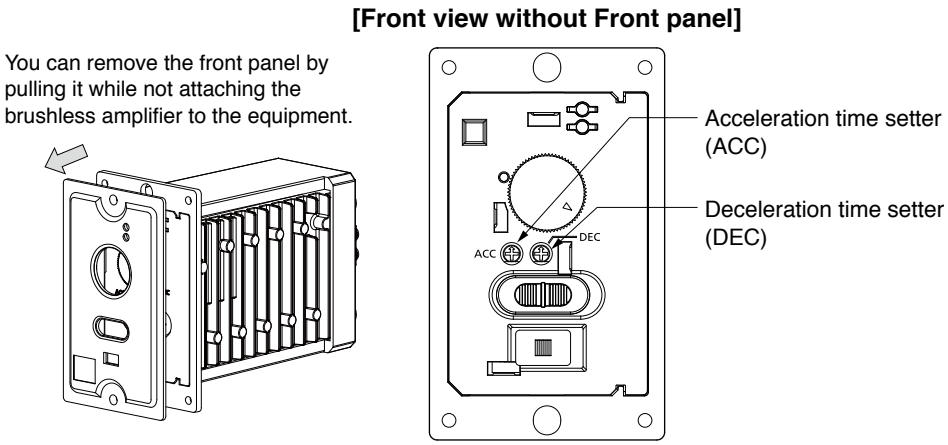

Installation

Install the brushless motor and brushless amplifier properly for preventing failure and accident.

Transport

- Do not carry the motor by holding the cable or the shaft.
- Do not drop or topple products.

Storage

- Keep the unit indoors in a clean and dry place free from vibration with little change of temperature.
- In keeping a gear head alone, direct the output shaft down.
  (Otherwise, grease leakage may occur.)

Location

- Location gives great influence upon the life of brushless motor and brushless amplifier, therefore choose a place in conformance with the conditions below:
  (1) Where vibration and shock do not participate.
  (2) Place where foreign matter such as dust, metal powder, oil mist etc is not applied.
  (3) Places where liquid, such as water, oil, grinding fluid etc is not applied.
  (4) A place away from inflammable materials.
  (5) Places where there is no influence of hydrogen sulfide, zinc acid, chlorine, ammonia, sulfur, chloride gas, sulfurizing gas, corrosive gas such as acid, alkali, salt and flammable gas.
  (6) A place away from the heating element.
  (7) Install on incombustible materials such as metal.
  (8) Places where rainwater or direct sunlight does not fall.
  (9) Well ventilated, there are no obstacles to block ventilation around.
  (10) Easy to check and clean.

Caution in installing gear head

Install a device that will ensure safety operation of the system even if the following failures should occur on the life end of gear head: idling by damaged teeth, locking by bite, grease leakage, and the like.

- As for application such as on a lifter or the like device, install a device for preventing drop by damaged teeth.
- As for application such as opening and closing of door, install a release device against locking by gear biting.
- As for food or textile equipment, install an oil pan for measures against grease leakage.
- Do not install an encoder, sensor, contact, etc., in the proximity of gear head. Or otherwise, protect such devices against grease leakage.
- In order to prevent unexpected accident, be sure to perform daily check.

Environmental condition

Item		Condition
Ambient temperature	Brushless motor	–10 °C to 40 °C (free from freezing) *1
	Brushless amplifier	0 °C to 40 °C (free from freezing) *1
	Digital key pad (Option)	0 °C to 50 °C (free from freezing) *1
Ambient humidity		20 % to 85 %RH (free from condensation)
Storage temperature		–20 °C to 65 °C *2
Protection structure	Brushless motor	IP65 (Excluding shaft pass-through section and lead wire connector) • This motor meets test requirements specified in EN standards (EN60529 and EN60034-5). This motor cannot be used for an application that requires long term waterproof performance, such as the case where the motor is always washed with water.
	Brushless amplifier	Equivalent to IP20
	Digital key pad (Option)	
Vibration		Not greater than 5.9 m/s^2 (10 Hz to 60 Hz)
Altitude		Not greater than 1000 m

*1 Ambient temperature is measured at a distance of 50 mm from the product.
*2 Maximum temperature guarantee: 80 °C for 72 hours without condensation.

Installation of brushless motor

- **Oil and water protection**
  (1) Direct down the lead of cable as far as possible.
  (2) Avoid use in such an environment where the motor is always exposed to oil and water.
  (3) Avoid use with cable immersed in oil or water.
- **Stress to cable**
  (1) Make sure that stress is not applied to the lead or connection of cable due to bending or dead weight.
  (2) In installation where the motor moves, fix the cable of motor, and house the extension cable connected to it in the cable bear to reduce stress by bending as small as possible.
  (3) Allow the bending radius of cable as large as possible.

Installation

Installation of brushless amplifier

- Install the product up and down correctly in the direction shown below.
- Tightening torque of the product mounting screw should be selected appropriately so as not to be loose or damaged considering the strength of the screw to be used and the material of the installation destination.
  Recommended tightening torque (When install to steel plate with steel screw):
  M4 0.8 N·m to 1.2 N·m
- In order to cool effectively, please secure ambient space.
- Measure the ambient temperature 50 mm away from the side and bottom of the brushless amplifier.
  If measurement can not be made at 50 mm distance, including when using brushless amplifiers side by side, measure at the midpoint of the gap between the obstacle and the brushless amplifier or the gap between the brushless amplifier and the adjacent brushless amplifier.
  When the motor is driven, the brushless amplifier generates heat, but be sure to keep the temperature within the range including the heat generation.
- Install in an environment where the pollution degree around the product is 2 or less, such as putting it in a control panel with IP 54 or higher.

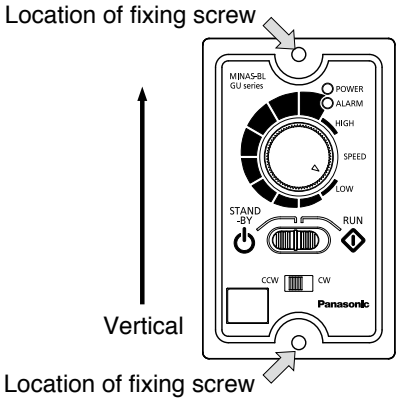

Caution

Cautions for Proper Use

(1) Because the control circuit is sensitive to temperature and impact, read this instruction manual carefully for proper installation.

(2) The brushless amplifier switches the power element at a high speed to control the motor. When the motor runs, leaking current will increase, which may activate the leakage breaker. If this is the case, use a leakage breaker provided with measure against high frequency for inverter.

(3) To start and stop the brushless motor, use the RUN switch on the front panel or the RUN command input (see the function of terminal on page 20).
Avoid operating the motor by turning on / off the power supply, since the life of the internal circuit will be shortened.

System configuration and wiring

System configuration/ general wiring diagram

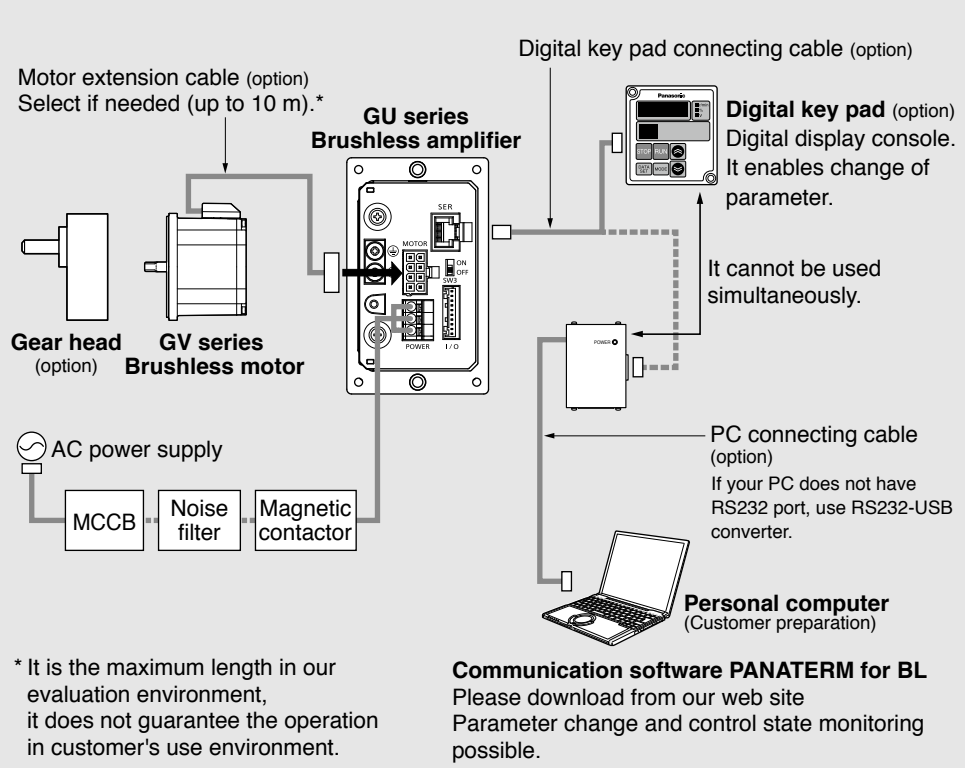

- Wiring work should be performed by qualified electric construction expart.
- Do not turn on power before finishing wiring, to avoid risk of electric shock.
- For details of options (sold separately), see P.74.

Wiring equipment

- Recommended noise filter

Voltage	Optional part number (option)	Manufacturer's part No.	Manufacturer
Single phase 100, 200 V	DV0P4170	SUP-EK5-ER-6	OKAYA ELECTRIC IND. CO., LTD.
3-phase	DV0PM20042	3SUP-HU10-ER-6	

- Selection of Molded Case Circuit Breaker (MCCB), magnetic contactor, and electric wire (wiring within equipment) (refer to P.64 “Conformance to EC directive and UL standard” for compatibility with overseas standard.)

Voltage	Capacity (W)	MCCB (rated current)	Magnetic contactor rated current (contact structure)	Minimum wire size (mm^2) (Wiring within equipment)	
				Main circuit/ Grounding wire	Control circuit
Single phase 100V	50 to 130	5 A	20 A (3P+1a)	0.5 (AWG20)	0.13 (AWG26)
Single phase 200V	50 to 130	5 A	20 A (3P+1a)	0.5 (AWG20)	0.13 (AWG26)
3-phase 200V	50 to 130	5 A	20 A (3P+1a)	0.5 (AWG20)	0.13 (AWG26)

■ **Be sure to ground the grounding terminal.**

In wiring to power supply (outside of equipment) from MCCB, use an electric wire of 1.6 mm diameter (2.0 mm^2) or more both for main circuit and grounding. Must be grounded with resistance less than 100 Ω. Do not tighten the ground wires together, please tighten them individually.

- **Selection of relay**

  As for use for control circuit such as control input terminal, use a relay for small signal (minimum guarantee current 1 mA or less) for preventing poor contact.

  <Example>

  Panasonic: DS type, HC type, OMRON: G2A type

- **Control Circuit Switch**

  When using a switch instead of relay, use one for minute current in order to prevent poor contact.

  <Example>

  Nihon Kaiheiki Ind.Co.,Ltd: M-2012J-G

Wiring

Wiring

Standard wiring diagram

• **In case of 3-Phase 200 V**

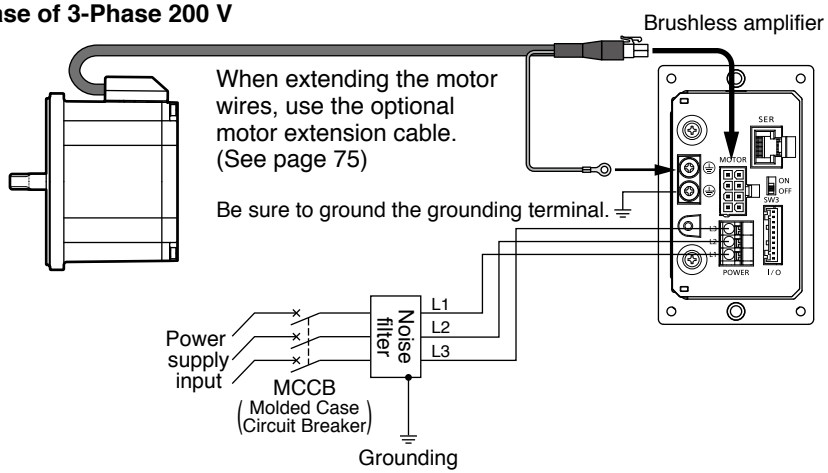

In wiring to power supply (outside of equipment) from MCCB, use an electric wire of 1.6 mm diameter (2.0 mm^2) or more both for main circuit and grounding.
Please ground with grounding resistance less than 100 Ω.
Do not tighten the ground wires together, but connect them individually.
Fastening torque of earth screws to be 0.8 to 1.2 N·m.

• **In case of single phase 100, 200 V**

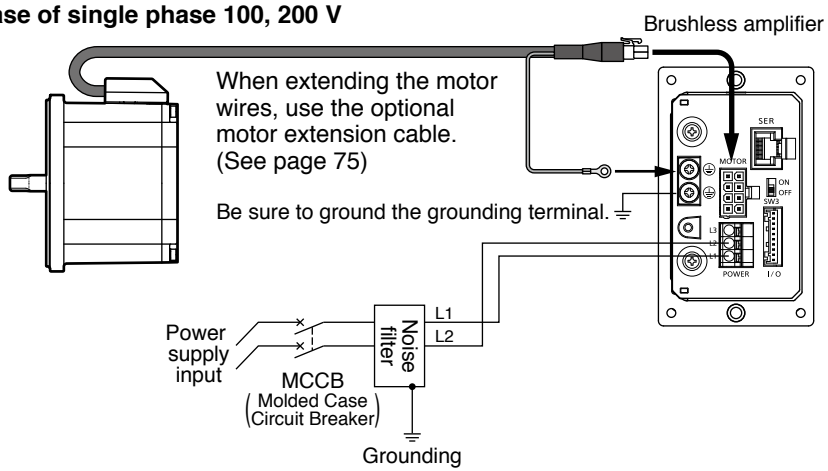

In wiring to power supply (outside of equipment) from MCCB, use an electric wire of 1.6 mm diameter (2.0 mm^2) or more both for main circuit and grounding.
Please ground with grounding resistance less than 100 Ω.
Do not tighten the ground wires together, but connect them individually.
Fastening torque of earth screws to be 0.8 to 1.2 N·m.

Function of terminal

Terminal for power supply (POWER)

Part number of terminal block: 0138-7603 (DINKLE)

Terminal symbol	Terminal name	Terminal explanation
L3	Terminal for power supply input	Connect the terminal to commercial power supply conforming to voltage specification. When you use single phase, connect the main power between L1 and L2 terminals.
L2		
L1		

The lower side of product is L1.

How to wiring:

Please use a single wire or rod terminal and insert as far into the connection hole.

Recommended rod terminal: TGN TC-1.25-9T(NICHIFU), Applicable wire size: AWG20 to 16.

In case of single wire: Strip length 10 mm (reference): Applicable wire size: AWG20 to 14.

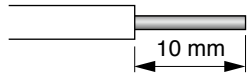

* Please check tools etc. necessary for terminal crimp on the home page of terminal manufacturer or contact terminal manufacturer.
* Since the strip length of the wire depends on the type of wire etc., please decide the optimum strip length according to the processing condition.

CAUTION: To prevent unforeseen circumstances due to poor contact etc., install and wire so that no stress such as pulling is applied to the terminal block through the cable.

How to remove wiring: Right figure

Using a flathead screwdriver with a blade width of 2.6 mm, push the Wire extraction button of the terminal block vertically and remove the electric wire. Be careful not to apply excessive force at this time. (Approximately 20 N or less)

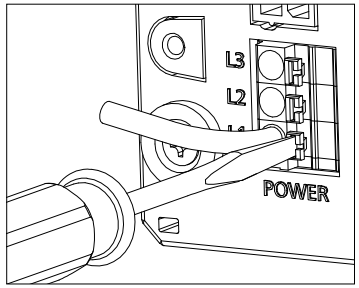

Wiring

Connector for control signals (I/O)

Connector on amplifier side: Parts No. S10B-PASK-2 (J.S.TMfg.,Co.,Ltd.) or equivalent.
(mating connector: Housing PAP-10V-S,
Terminal SPHD-001T-P0.5 (AWG26 to 22) or SPHD-002T-P0.5 (AWG28 to 24))

Terminal number	Terminal symbol	Terminal name	Terminal explanation
1	I1*1	Signal input 1	Run command input Motor runs when "I1" and "COM" are shorted, and stops when they are opened. The maximum rated voltage of I1 is −0.5 V to 5.5 V. It is linked with the front RUN switch. To use this terminal, turn on the I1 input enable switch (SW3) on the back and turn the RUN switch on the front to RUN.
2	I2*1	Signal input 2	Rotation changeover input CW operation when "I2" and "COM" are shorted, and CCW operation when they are opened.*2 The maximum rated voltage of I1 is −0.5 V to 5.5 V. It is linked with the rotate direction selector switch (CW / CCW). When using this terminal, turn CCW on the rotate direction selector switch on the front side.
3	I3*1	Signal input 3	Free-run stop input Free-run stop when "I3" and "COM" are shorted,
4	I4*1	Signal input 4	Trip reset input cancels a trip state when "I4" and "COM" are shorted
5	I5*1	Signal input 5	Free-run stop input Free-run stop when "I5" and "COM" are shorted,
6	COM *3	Signal ground	Common ground of analog speed input and input/output signal.
7	FIN	Input for speed setting	Speed can be set by applying voltage DC0 V to 5 V. Input impedance 100 kΩ. To use this function, it is necessary to change the setting by the optional "Digital key pad" or the communication software "PANATERM for BL".*4
8	+5V	Power supply for external speed setting	Power output dedicated when connecting an external variable resistor (5 kΩ, B characteristics) to FIN input (cannot be used for any other purpose.)
9	01*1	Signal output 1	Trip signal output. "L" in trip (Contact ON) Open collector Vce max: DC30 V, Ic max: 50 mA
10	02*1	Signal output 2	Velocity pulse output. (24 pulses / 1 rotation) Open collector Vce max; DC 30 V, Ic max; 50 mA

*1 Function of input/output can be changed by the Digital key pad or PANATERM for BL. Default is shown. Please refer to The function of parameters of P.52.

*2 CW / CCW is the direction of motor shaft rotation.
(CW: clockwise rotation viewed from the motor shaft side CCW: counterclockwise rotation viewed from the motor shaft side)
The direction of rotation of the gearhead output shaft may change. (See page 28)

*3 When the external variable resistor and the control ground (COM) are disconnected at the time of using the external variable resistor, 5 V is input to the FIN regardless of the setting of the variable resistor and the upper limit speed is commanded. Therefore, Please be careful.

*4 Please see 74 page for options.

■ **The terminal number of the connector for control signals (I/O) is 10, 9, 8,…, 1 from the SER connector side. (Refer to Standard wiring diagram)**

◆ Do not touch the terminals of the control circuit and do not connect or disconnect the I / O connector while energizing. It may malfunction due to static electricity.

◆ When extending the control signal cable, set it to 3 m or less.*5

◆ To prevent unexpected situations due to poor contact etc., install and wire so that stress such as pulling is not applied to the connector via cable. Confirm that the caulking of the wire is secure and that the connector is inserted securely.

◆ Use a twisted wire or a shielded wire for the wire connected to the control circuit.

◆ Please separate the electric wire connected to the control circuit from the power line.

*5 It is the maximum length in our evaluation environment and it does not guarantee the operation in the customer's use environment.

Wiring

Wiring example when using external speed setter as speed command and operating with external input

When using the I1 input, turn on the I1 input enable switch (SW3) on the back of the product and set the RUN switch on the front of the product to RUN.
When using the I2 input, set the CCW / CW switch on the front of the product to CCW.
When setting the speed with the FIN terminal, it is necessary to change the parameter.

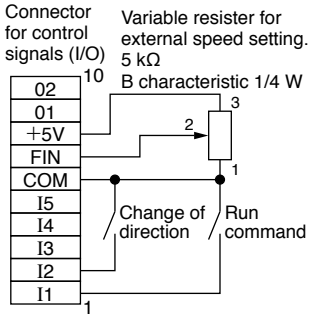

Input circuit

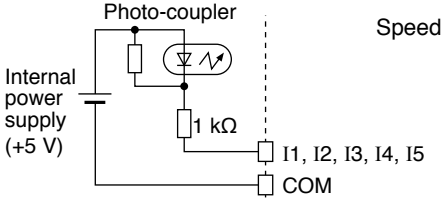

Output circuit

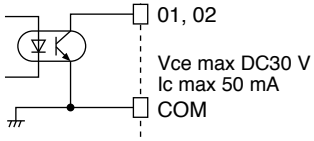

FIN characteristic

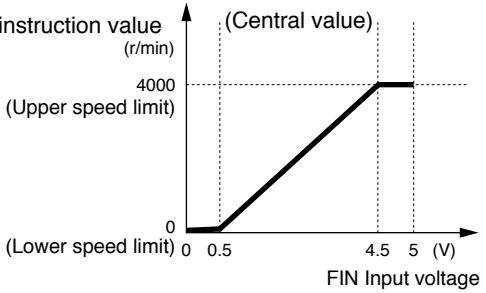

To directly drive the relay (RY) using the output terminal (O1, O2 to COM), please insert a flywheel diode (FD). (See the figure on the right)

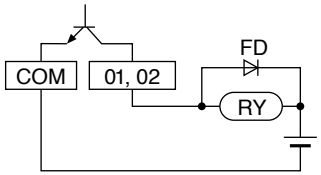

Connector for motor connection (MOTOR)

Connector on amplifier side: Parts No. 5569-08A1-210 (Molex Inc.) or equivalent.
(mating connector: Housing 5557-08R-210, Terminal 5556PBTL)

Terminal number	Terminal symbol	Terminal name	Terminal explanation
1	U	Motor U phase	Connect motor wire U, V and W.
2	V	Motor V phase	
3	W	Motor W phase	
4	5VS	High voltage 5 V	Not isolated from commercial power source. Use care to avoid electric shock and grounding fault.
5	CS1	CS signal 1	
6	CS2	CS signal 2	
7	CS3	CS signal 3	
8	GNDS	High voltage GND	

- High voltage is applied to motor wire and CS signal line; Use caution for avoiding electric shock.
- Use a motor extension cable (option) for extending motor wire.
- No.4 to 8 terminals of option cable are shielded, But the shield material is not grounded. please do not ground the shield material in order to avoid malfunctions or damages.

Connector for communications (SER)

Modular jack: 85503-0001 (Molex Inc.) or equivalent (RJ45)

Terminal number	Terminal symbol	Terminal explanation
1	—	Do not connect anything.
2	+5V	DC5 V power supply for Digital key pad
3	SOT	Interface for Digital key pad or PANATERM for BL
4	SIN	
5	—	Do not connect anything.
6	—	Do not connect anything.
7	COM	Power supply GND for Digital key pad
8	SCK	Interface for Digital key pad

- Connection of Digital key pad of an option is possible.
  Digital key pad connecting cable of an option (DV0P383**) is required.
- The terminal number of a modular jack is as shown below.

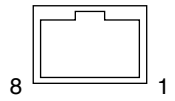

Test run

Inspection prior to test run/Test run

Inspection prior to test run

After completion of installation and wiring, check the connections and supplies as shown below:

(1) Make sure that all wiring is correct.
- Power input terminal: Check of connection L1, L2, L3
- Check of connection of a motor connector

(2) Make sure that input power supply conforms to rating.

Test run

You can operate according to one of the following methods 1, 2, 3, 4.

1 When operating with switches and knobs on the front of the product (Factory setting)

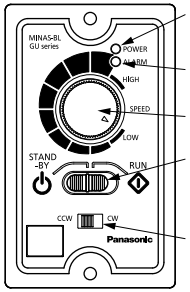

When power is turned on, the power LED will light green.

When a trip occurs, the alarm LED lights in red. When the RUN switch is set to the RUN side, the motor rotates and when it is returned to the STANDBY side it stops.

The rotation direction can be changed with the rotate direction selector switch. If this switch is changed while the motor is rotating, a trip may occur depending on the inertia of the load.

The rotation speed can be adjusted with the speed setting knob.

If you stop for a long time, please turn off the power.

> ■ **Attention**
>
> **If you turn off the power with the RUN switch on the RUN side, it is dangerous because the motor restarts when the power is turned on. Before turning on the power, make sure that it is on the STANDBY side.**

- When gear head is incorporated, the rotation direction of motor and that of gear output shaft are reversed for some gear reduction ratio. Please refer to the table of the permissible torque (P.28).

2 Operation with external control signal

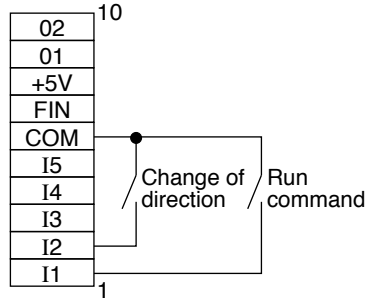

Set the RUN switch on the front panel to “RUN”, the rotate direction selector switch to “CCW”, and the I1 input enable switch (SW3) on the back of the product to “ON”.

When power is turned on, the power LED lights in green.

Upon tripping, the alarm LED lights in red.

The motor runs at the speed set with the speed setting knob when the Run command input “I1” is short-circuited to “COM” and stops when the circuit between “I1” and “COM” is disconnected.

Rotating direction: CW when the Rotation changeover input “I2” is shorted to “COM”, and CCW when “I2” is disconnected from “COM”.

[CW : clockwise when viewed from motor shaft
CCW : counterclockwise when viewed from motor shaft]

If the rotation direction is reversed while the motor is running, the rapid directional switching can cause tripping due to the inertia of load.

When using a relay or switch for short-circuiting, select a minute electric current type (minimum guaranteed current 1 mA or below).

> ■ **Attention**
>
> **When power is turned off and on again while RUN command input “I1” is short-circuited to “COM”, the motor will start again, which is dangerous. Make sure that the circuit between “I1” and “COM” is open before turning on power.**

- When gear head is incorporated, the rotation direction of motor and that of gear output shaft are reversed for some gear reduction ratio. Please refer to the table of the permissible torque (P.28).

3 With Console A

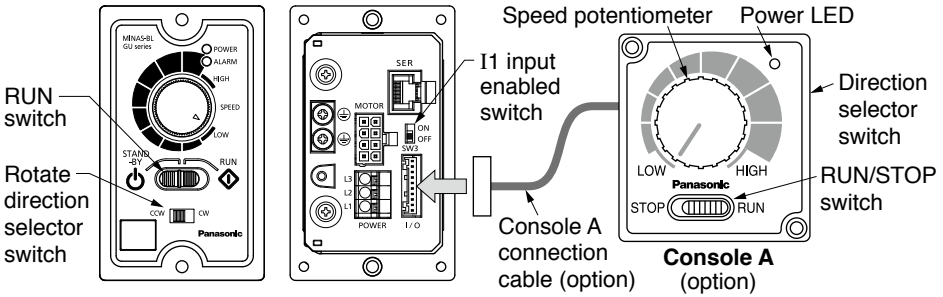

Set the RUN switch on the front panel to “RUN”, the rotate direction selector switch to “CCW”, and the I1 input enable switch (SW3) on the back of the product to “ON". Change parameter 31 from “Vol - F” to “Vol - A” using Digital key pad or PANATERM for BL.

To start the motor, set RUN/STOP switch to RUN position, and to stop the motor, set the switch back to STOP position.

Rotating direction can be switched from the direction selector switch on the side of Console A.

If the rotation direction is reversed while the motor in the RUN mode, the rapid directional switching can cause tripping due to the inertia of load.

Rotation speed can be adjusted by the speed potentiometer.

Turn off power when the motor is to be stopped for a long time.

■ Attention

When power is turned off with RUN/STOP switch in RUN position, and turned on again, the motor will start again, which is dangerous. When turning on power, always make sure that the switch is in STOP position.

- When gear head is incorporated, the rotation direction of motor and that of gear output shaft are reversed for some gear reduction ratio. Please refer to the table of the permissible torque (P.28).
- For connection to Consol A, use optional Consol A connecting cable. (option: P.74)
- The procedure descried above is for operation according to factory default. Different procedure is required if internal parameters have been changed by using the Digital key pad or PANATERM for BL.

<Connections on Consol A and I/O connector>

I/O connector side Terminal No.	Terminal symbol	Lead color of a cable	Console A side terminal No.
1	I1	Brown	1
2	I2	Red	2
3	I3		—
4	I4		—
5	I5		—
6	COM	Orange	3
7	FIN	Yellow	4
8	+5V	Green	5
9	01		—
10	02		—

4 Digital key pad

Please refer toTest run (Digital key pad) (P.41).

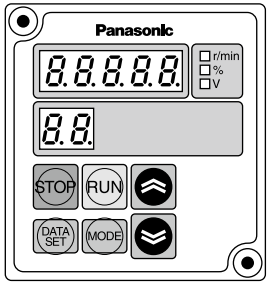

Digital key pad

Checking load and use condition

Check the use condition for extended use of the product. Particular use conditions may lead to heating or damage to the shaft. Fully check use conditions, and use the motor in a permissible range.

Standard life

Standard life is 5,000 hours for the motor equipped with gear head. Standard life of the motor without gear head (round shaft) is 10,000 hours (however, effective life of the oil seal is 5,000 hours).
Standard life is the designed lifetime predicted based on assumption that it is operated 8 hours/day (service factor: Sf = 1.0) under uniform loading (gear head allowable shaft torque, motor rated torque) at normal temperature and humidity.

Calculate the standard life when using the gearhead with a motor rotation speed exceeding 3000 r/min as follows.

Standard life (hours) = 5000 (hours) × 3000 (r/min) / operating speed (r/min)

Service factor (Sf)

$$\text{Life expectancy} = \frac{\text{Standard life}}{\text{Service factor (Sf)}}$$

Service factor (Sf) varies with impact of load and operation time. The table below shows how the service factor value depends on load condition.

Type of load	Typical load	Service factor		
		5 hours/day	8hours/day	24hours/day
Constant	Belt conveyor, One-directional rotation	1.0	1.0	1.5
Light-impact	Start/Stop, Cam-drive	1.2	1.5	2.0
Medium-impact	Instant FWD/REV, Instant stop	1.5	2.0	2.5
Heavy-impact	Frequent medium-impact	2.5	3.0	3.5

Permissible torque

The required gear head allowable shaft torque T_A can be determined based on the service factor and actual load torque T_1.

$T_A = T_1 \times Sf$

Select a gear head/motor so that the required torque (continuous value) is equal to or lower than the allowable shaft torque shown in the table below. In any condition, torque T_1 is not allowed to exceed the allowable shaft torque T_A regardless of Sf.

• **Motor rotation speed: 3000 r/min or less.** Unit: N·m

Model name	Reduction ratio	3	3.6	5	6	7.5	9	10	12.5	15	18	20	25	30	36	50	60	75	90	100	120	150	180	200
MBMU5AZAX MX8G□B		0.39	0.46	0.64	0.77	0.96	1.16	1.29	1.61	1.92	2.33	2.59	3.23	3.61	4.33	5.93	7.29	7.84						–
MBMU9A○AZ MZ9G□B MY9G□B		0.67	0.81	1.12	1.34	1.69	2.02	2.28	2.54	3.06	3.72	4.11	5.27	6.22	6.96	9.81	11.7	14.7	17.3	19.0	19.6			
MBMU1E○AZ MZ9G□B MY9G□B		1.01	1.21	1.69	2.02	2.54	3.04	3.42	3.82	4.59	5.58	6.17	7.91	9.34	10.5	14.7	17.5	19.6						

* Direction of rotation: ▭ represents that the direction is same as that of motor; otherwise opposite to that of motor

• ○ in the part name of motor represents either 1 or 2 which indicates supply voltage.

• □ in the part name of gear head represents a figure which indicates reduction ratio.

• **Motor rotation speed: 3000 to 4000 r/min or less.** Unit: N·m

Model name	Reduction ratio	3	3.6	5	6	7.5	9	10	12.5	15	18	20	25	30	36	50	60	75	90	100	120	150	180	200
MBMU5AZAX MX8G□B		0.29	0.35	0.48	0.58	0.72	0.87	0.97	1.21	1.44	1.75	1.94	2.42	2.71	3.25	4.45	5.47	6.84	7.84					–
MBMU9A○AZ MZ9G□B MY9G□B		0.50	0.61	0.84	1.01	1.27	1.52	1.71	1.91	2.30	2.79	3.08	3.95	4.67	5.22	7.36	8.78	11.0	13.0	14.3	17.0	19.6		
MBMU1E1AZ (100 V) MZ9G□B MY9G□B		0.59	0.71	0.99	1.18	1.49	1.78	2.00	2.24	2.69	3.27	3.61	4.63	5.47	6.15	8.60	10.2	12.9	15.4	17.2	19.6			
MBMU1E2AZ (200 V) MZ9G□B MY9G□B		0.76	0.91	1.27	1.52	1.91	2.28	2.57	2.87	3.44	4.19	4.63	5.93	7.01	7.88	11.0	13.1	16.5	19.6					

* Direction of rotation: ▭ represents that the direction is same as that of motor; otherwise opposite to that of motor

• ○ in the part name of motor represents either 1 or 2 which indicates supply voltage.

• □ in the part name of gear head represents a figure which indicates reduction ratio.

Shaft permissible load

The load should not cause the limits shown in the table below to be exceeded.

	Model name	Permissible overhung load (W)	Permissible thrust load (F)
Motor shaft	MBMU5AZAS	100 N	10 N
	MBMU9A○AS	120 N	20 N
	MBMU1E○AS	150 N	20 N
Gear shaft	MX8G type	294 N	49 N
	MZ9G type MY9G type	588 N	147 N

• ○ in the part name of motor represents either 1 or 2 which indicates supply voltage.

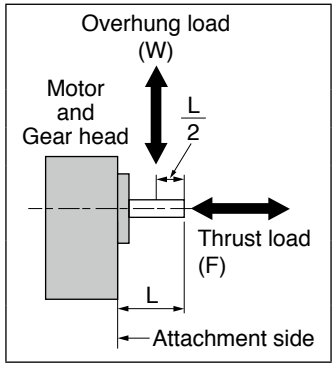

Permissible load inertia moment

Unit: $\times 10^{-4}$kg·m²

Model name	Reduction ratio	3	3.6	5	6	7.5	9	10	12.5	15	18	20	25	30	36	50	60	75	90	100	120	150	180	200
MBMU5AZAX MX8G□B		1.25	1.79	3.42	4.90	7.72	11.2	13.8	21.6	30.6	45.2	55.8	86.9	127	183	342								—
MBMU9A○AZ MBMU1E○AZ MZ9G□B MY9G□B		5.93	8.47	16.4	23.6	37.3	53.4	67.6	98.3	142	211	257	423	589	847	1684								

• ○ in the part name of motor represents either 1 or 2 which indicates supply voltage.

• □ in the part name of gear head represents a figure which indicates reduction ratio.

Assembling of gear head

Assembling of gear head

- **Preparation for assembling**

(1) Use the product in combination with only the compatible gear head. Failure to observe this instruction will result in malfunction.

(2) Make sure that the O-ring is attached to the bottom of motor flange.
If the gear head is assembled with O-ring floating, it may result in grease leakage.

(3) When grease adheres to the end surface of gear head, thoroughly wipe it off.
If the gear head is assembled with grease adhered, it may exude.

- **Assembling**

(1) Direct the motor pinion upward, and make sure that the relation between direction of motor lead wire and output shaft of gear head matches with the equipment.

(2) Do not contact a tooth tip of pinion shaft to a tooth tip of gear head.
Set each toothes of motor and gear head correctly and gently press and turn the gear head in counter and counter-clockwise.

(3) To attach the gear head to an application, use the "attaching screws" supplied with the gear head and tighten the screws with appropriate torque and with care not to pinch the O-ring, so that the there is no gap between motor flange and gear flange.
The recommended torque is shown below.

Size	Gear head type	Screw size	Tightening torque	Attachment pitch
80 mm sq.	MX8G	M5	2.5 N·m	94 mm
90 mm sq.	MZ9G	M6	3.0 N·m	104 mm
	MY9G	M6	3.0 N·m	—

<Note>

Do not forcedly assemble the motor and gear head. Do not damage the tooth of the motor pinion and gear head. Incorrect assembly results in abnormal noise generation or shortened unit life.

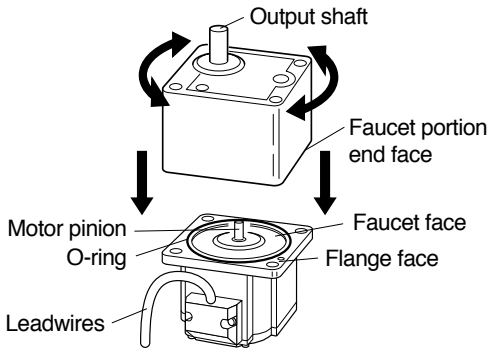

Maintenance/ Inspections

Maintenance/ Inspections

Routine maintenance and inspection are essential for proper and satisfactory operation of the motor.

Maintenance/ Inspection item

Maintenance/ Check item	Inspection procedure	Condition
Input voltage	Voltmeter	Must be within ±10% of rating.
Input current	Ammeter	Must be within rated input current described on nameplate.
Insulation resistance	Insulation resistance tester	The resistance of motor should be 1 MΩ or higher when tested with a 500 V megger. Measuring position: Between power input line (L1, L2,L3) and grounding wire Brushless motor: Across phase (U, V, W) and ground terminals
Noise	Hearing	Noise level must not be different from the usual level. In addition, abnormal noise such as rumbling noise must not be heard.
Vibration	By hand	Free from abnormal vibration.
Grease leakage	Visual check	Check that circumference of the motor and gear head are free from oil and grease. If grease leakage will cause problem, use grease sealing cover.
Installation bolt	Torque wrench	Check for loosening of bolt, and tighten additionally as necessary.
Use environment	By sight	Check the ambient temperature and humidity, and make sure that dirt, dust, or foreign substance is not found.

Caution

- Power-on/off operations should be done by the operators themselves for ensuring safety in checking.
- Do not touch the motor while it is running or immediately after it stops because it gets hot and stays hot for a while after power has been turned off.
- When testing the insulation resistance of the brushless amplifier with the megger, disconnect the amplifier from all associated devices. Performing megger testing without first disconnecting these devices will cause failure.
- Do not use benzine, thinner, alcohol, acidic or alkaline detergent, as it may cause discoloration or breakage of the outer case.

When disassembly, troubleshooting, etc., is needed,
be sure to contact our service department or the sales agent of purchase.

Protective functions

Protective functions

Description of trip can be displayed only when the Digital key pad (option) or PC is connected. Protection function works even when the Digital key pad or PC is not connected, but it is not displayed.

Trip number	Protective item	Description	Measure	Display on Digital key pad
1	Sensor error *	The brushless amplifier trips when trouble of CS sensor signal is detected.	It may be a malfunction due to external noise.	E-CS
—	Under voltage warning (default)	When the internal DC voltage is below specified value, operation is stopped; when voltage is recovered, operation is started again. (This is not trip, and no trip output is made.) • **Trip can be set by parameter 50 to YES.** Product of 100 V: Approx DC100 V, Product of 200 V: Approx DC200 V	Investigate the condition of wiring and circumstances of power supply.	L
2	Undervoltage error	• The brushless amplifier trips when internal DC voltage is below specified value **only if trip is set by parameter 50 to YES.** 100 V product: Approx DC100 V, 200 V product: Approx DC200 V		E-LV
3	Overvoltage error	The brushless amplifier trips when internal DC voltage (voltage of power supply smoothing capacitor) rises and exceeds specified value. Product of 100 V: Approx DC200 V, Product of 200 V: Approx DC400 V	If the motor should trip in running, too short deceleration time is one of the causes. Adjust deceleration time.	E-OV
—	Overload warning (Electronic thermal)	When the load factor reaches 100% overload warning level, the monitor display flashes.	Lower the load factor below 100% by reducing load, changing operation pattern or increasing motor capacity.	5-digit LED flashes.
4	Overload error (Electronic thermal relay)	The brushless amplifier trips when motor torque is output continuously above 115%.		THr
5	Overspeed error	The brushless amplifier trips when rotation speed (actual speed) exceeds specified value. Approx 6000 r/min	Check for overshooting due to too short acceleration time.	E-OS
8	Overcurrent error *	The brushless amplifier trips when the motor current exceeds specified current.	It may have been caused by excessive acceleration/deceleration setting or gain setting. Set the longer acceleration/deceleration time and the smaller gain. If this trip should occur as soon as the unit is started, It may be breakdown.	E-OC
9	Overheat error	The brushless amplifier trips when the temperature in control section rises above specified value. Approx. 105 °C	Check the ambient temperature and cooling condition of brushless amplifier. Check the load factor and operation pattern.	E-OH
10	External forced trip	The brushless amplifier trips when external forced trip input becomes active.	If an external thermal element is used, check the cause of temperature rise.	E-OL
11	Setting change warning	The brushless amplifier trips when any important parameter such as " **30** Run command selection" is changed.	This is not abnormal. Reset trip in order to make change effective.	CAU
30	Parameter initialization display	Select YES in " **54** Parameter initializing". Turn off power and then on to trip.	This is not abnormal. The parameter was initialized. It is clearable only by power supply re-injection.	- - - -
90 91	Parameter error *	Parameter data saved in EEPROM is abnormal.	E-UPr: recheck and reset all parameters. E-SPr: internal parameter error. It may be breakdown.	E-UPr E-SPr
Other number	CPU error *	The brushless amplifier trips when trouble of control microcomputer is detected.	It may have been caused by malfunction due to external noise. Investigate for noise source.	Err

* To cancel the trip when the protection function with * is activated, please perform the method of (1) on page 34.

Overload protection time characteristics

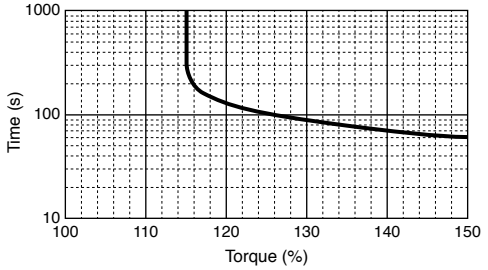

How to clear trip

How to clear trip

If the brushless amplifier should trip, eliminate the cause and use any of the procedures (1) to (4) below for reset.

(1) Turn off power, and when power LED has gone out, turn on power again.

(2) Press the switch and present trip state displayed.

(3) Input the trip reset signal.

(When F-r or r-F is chosen in " **33** I1/I2 function selection", enter "I1" and "I2" at the same time; when F-rST or r-rST is chosen, enter "I2" for trip reset.
If rST is selected for " **34** I3 function selection", " **35** I4 function selection", " **36** I5 function selection", trip reset can also be performed by inputting a signal.
Trip reset signal, when continued to be input, is designed to become ineffective in order to prevent inadvertent restarting. Enter trip reset signal only when necessary.)

(4) Resetting trip with PANATERM for BL
Trip can be reset from the PC by using optional PC connection cable *1 (option) and communication software (PANATERM for BL: can be downloaded from our web site free of charge).
For details, refer to PANATERM for BL instruction manual.

Note: When the cause is Overcurrent error E-OC, Sensor error E-CS, CPU error Err or User parameter error E-UPr, turn off power as described (1) above. Otherwise, the trip cannot be reset.

<Caution>
In clear trip, be sure to find and remove the trip factor before clear.

*1 To use the optional PC connection cable (sold separately), RS232 port is required.
When the PC has no RS232 port, use RS232-USB converter.

Troubleshooting

If any trouble should be found, follow the steps below for check and countermeasure.

- If the cause cannot be found, it is recommended to use the Digital key pad, PANATERM for BL, RS232 communication, and check the detail of trip. If failure is likely, or when any part is damaged, or when you are in any other trouble, contact the sales agent of purchase or our company.

Phenomenon	Detail of checking	Measure, etc
Motor does not rotate.	Check for abnormality of wiring.	Apply proper wiring.
	Check whether protective function is activated. Check whether alarm LED (red) is on.	Check the detail of trip . Turn off power once, and turn on again.
	Check whether power LED (green) is lighted up.	Turn on power.
	Check whether voltage on input power is normal.	Check the supply voltage.
	Check whether operation start signal is input.	Check the condition of operation instruction.
	When driving with the RUN switch on the front of the product, is the I1 input enabled switch (SW 3) on the back of the product turned ON?	When operating with the RUN switch on the front of the product, set SW3 to OFF.
	Check whether analogue speed instruction is set at 0 V.	Raise the analogue speed instruction little by little.
Motor does not rotate or stops during operation.	Check whether protective function is activated.	Overload is possible. Reduce the load or increase the output capacity.
Motor stops during deceleration.	Check whether the inertia of load is too large.	Regenerative voltage protection may have worked. Decrease the inertia. Turn off power once, and turn on again, and reset the trip state. Make deceleration time longer. Alternatively, apply free-run stop.
Large vibration or noise.	Output shaft of motor (gear head) and shaft of load are not aligned.	Check the joint between the output shaft and load shaft of the motor (gear head).
	Motor and gear head are not assembled correctly.	Check the assembling condition between motor and gear head, and their combination, and assemble them properly.
	Damage to gear head or bearing.	Contact us for repair.

Troubleshooting

Phenomenon	Detail of checking	Measure, etc
Motor rotates reversely.	Check the rotate direction setting.	Check the position of the rotate direction selector switch (CW / CCW) on the front of the product. When using the input “I2”, set the rotate direction selector switch to CCW.
	Rotation direction of the motor and gear output shaft may be reversed for some gear reduction ratio of gear head.	Check the gear ratio and rotation direction. Please refer to the table of the permissible torque (P.28).
Rotation speed is unstable during operation (actual speed).	Check whether the load fluctuates greatly.	Reduce the fluctuation of load. Increase the output capacity.
Parameter dose not change.	Check whether operation start signal is input.	Some parameters cannot be changed when operation instruction is on. (See the check column of parameter list on P.47.) Turn off operation instruction before changing.
Motor does not rotate smoothly at low speed.	The inertia of the load is small, such as running the motor alone.	• Drive with load connected • Increase the load inertia, such as attaching a flywheel. • It may be necessary to adjust the speed loop proportional gain larger. Please be aware that increasing the speed loop proportional gain may increase the vibration during high-speed operation.
Peripheral electronic devices malfunction.	During operation, radio noise may be generated from input / output lines, brushless motors, brushless amplifiers, etc., which may affect electronic devices.	It can be suppressed to some extent by installing a noise filter at the input, storing the electric wire inside the conduit, installing a noise filter for control signal, and so on.
Earth leakage breaker works unnecessarily when driving	Leakage current increases when brushless motor and brushless amplifier are operated.	Please use self-system and other-system earth leakage breaker with harmonic countermeasure applied.

MEMO

How to use Digital key pad (option)

Name of each part and how to setup

• What can be done by Digital key pad

- Monitoring of rotation speed (actual speed) and load factor, etc. (Rotation speed can be displayed being multiplied by the factor set by parameter **47** and **48**.)
- Display detail of trip, and trip history. Trip reset by pressing ⊛ and ⊛ .
- Parameter setting, initialization, and copying function.
- Start and stop of motor by RUN , STOP switch (Setting of parameter " **30** Run command selection" is required.)

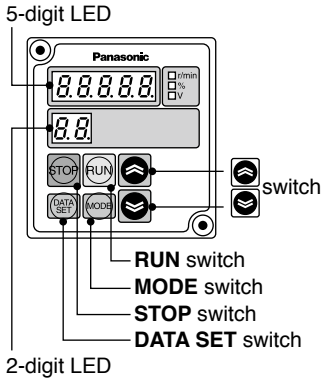

• Name of each part

5-digit LED	Displays rotation speed (actual speed), commanded speed, trip history, setting of parameter, and the like.
2-digit LED	Displays the number of parameter (in editing parameter). Displays the rotation direction in operation. Displays 00 when the motor is stopped. (CCW as viewed from the output shaft of motor ... F and CW... r) **Rotation direction of gear head output shaft may be reversed for some gear reduction ratio when gear head is incorporated.** Please refer to the table of the permissible torque (P.28).
MODE switch	Switch for changing monitor mode. Whenever this switch is pressed, the mode changes in this sequence: Rotation speed (actual speed) → Internal DC voltage (voltage of smoothing capacitor of power supply) → Load factor → torque reference → Commanded speed → Rotation speed (actual speed) → ...* * When you press this switch in the parameter setting mode, setting is stored.
DATA SET switch	This switch is for changing parameter number mode and parameter setting mode, and for saved parameter setting.
⊛ ⊛ switch	This switch enables selection of parameter, and setting and changing of contents. When the motor is tripped, pressing ⊛ and ⊛ at the same time enables reset of trip.
RUN switch	This switch is for instruction of operation. (Only when " **30** Run command selection" is PnL) • See " **33** I1/I2 function selection" (2) on P.57 for rotation direction. • Disconnecting the Digital key pad while operating with RUN switch will stop the operation.
STOP switch	This switch is for instruction of stopping. (Only when " **30** Run command selection" is PnL)

• Description

Monitor mode	Displays rotation speed (actual speed), setting speed, internal DC voltage, load factor, and torque reference on 5-digit LED. **This mode is set when power is turned on.** Control changes to this mode when MODE switch is pressed in parameter number mode, parameter setting mode.
Parameter number mode	Displays a parameter number (**00** to **F0**) in **blinking**. Control changes to this mode when DATA SET switch is pressed in monitor mode. Parameter number can be changed and selected by ⊛ and ⊛ switch.
Parameter setting mode	Displays the detail of parameter (setting) in **blinking**. Change setting by ⊛ and ⊛ switch. When DATA SET switch or MODE switch is pressed after change of setting, it is saved in EEPROM.

* Displays rotation speed r/min in normal monitor mode. Displays torque reference and load factor assuming the rated motor torque at 100%.
* Display is just a guide. Do not use the Digital key pad for a measuring instrument.

Operating Instruction

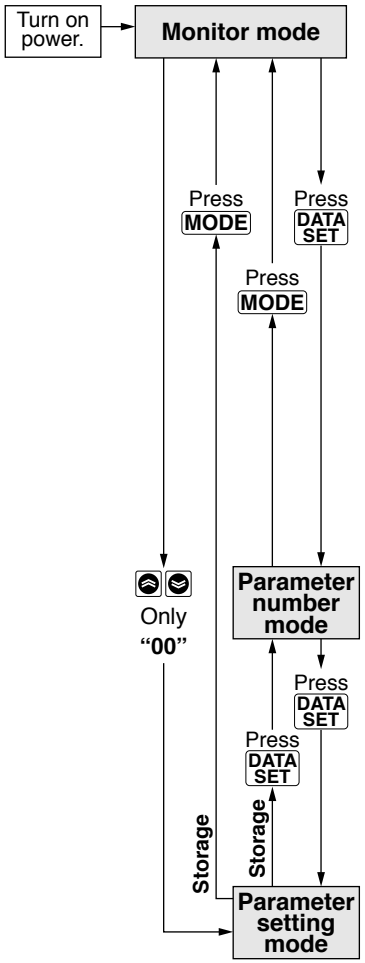

When DATA SET switch or MODE switch is pressed in parameter setting mode, data is stored.

• Press MODE switch for changing display.

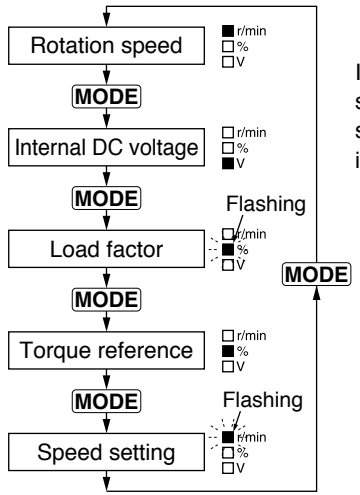

Internal speed (0-th speed) can be directly set by ⌃ and ⌄ in monitor mode.

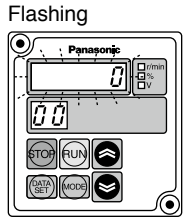

• 2-digil LED blinks and allows selection of parameter number.

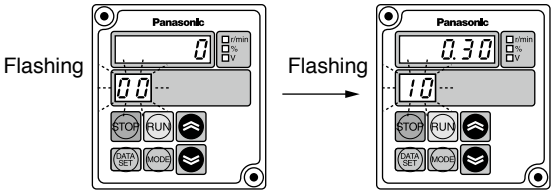

Change (select) a parameter number by ⌃ or ⌄.

• 5-digit LED blinks and allows change of parameter value.

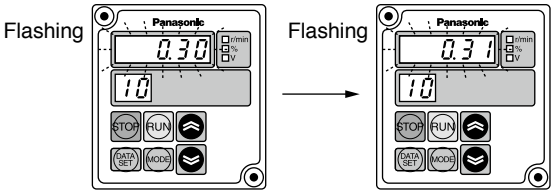

Change (select) a parameter value by ⌃ or ⌄.

• When ⌃ or ⌄ is pressed in monitor mode, detail of " **00** Internal speed (0-th speed)" is displayed in blinking, and speed setting can be changed by ⌃ and ⌄.
When " **31** Speed command selection" is PnL, the motor speed also changes following the speed setting if the motor is running.

Data is stored only when DATA SET switch is pressed. If the power is turned off without storage, setting data will return.

Test run (Digital key pad)

Inspection prior to test run/ Test run

Inspection prior to test run

(1) Make sure that all wiring is correct.
(2) Make sure that input power supply conforms to rating.

Test run

Test run procedure by the Digital key pad is as follows:
An example is introduced here where the motor runs CW at 1800 r/min with the Digital key pad.

(1) Be sure to first perform the work below for safety.
Separate the motor from machine or equipment, and make sure that the motor alone can be operated.
(2) Then turn on power and follow the step below for test run.

Description of operation	Digital key pad	
	Switch	LED display
[1] Turn on power		0 r/min % V 00
[2] Change of initial setting (Change the choice of operation instruction from I1/I2 rEr to the Digital key pad PnL.)	Press DATA SET	0 r/min % V 00 Flashing
	Press ⌃ several times to choose parameter **30**.	rEr r/min % V 30 Flashing
	Press DATA SET	
	Press ⌄ to change parameter value.	rEr r/min % V 30 Flashing ⇨ PnL r/min % V 30 Flashing
	Store by DATA SET.	
	Setting change warning is issued because setting of operation instruction has been changed.	CAU r/min % V
[3] Trip reset	Press ⌄ and ⌄ at the same time.	CAU r/min % V ⇨ 0 r/min % V 00

Test run (Digital key pad)

Description of operation	Digital key pad	
	Switch	LED display
[4] Change of initial setting 2 (Change the choice of speed instruction from analogue speed instruction input to " **00** Internal speed (0-th speed)" to enable use of Digital key pad.)	Press DATA SET Press ⌃ several times to choose parameter **31**.	0 r/min % V 00 Flashing UoL-F r/min % V 31 Flashing
	Press DATA SET Press ⌄ to change parameter value. Store by DATA SET .	UoL-F r/min % V 31 Flashing ⇨ PnL r/min % V 31 Flashing
	Setting change warning is issued because setting of operation instruction has been changed.	CAU r/min % V
[5] Trip reset	Press ⌄ and ⌄ at the same time.	CAU r/min % V ⇨ 0 r/min % V 00
[6] Choosing rotation direction* (This operation is not required for rotation forward [CCW].)	Press DATA SET Press ⌃ choose several times to parameter **33**.	0 r/min % V 00 Flashing rS.Fr r/min % V 33 Flashing
	Press DATA SET Press ⌄ to change parameter value. Store by DATA SET .	rS.Fr r/min % V 33 Flashing ⇨ r-F r/min % V 33 Flashing
	Setting change warning is issued because setting of operation instruction has been changed.	CAU r/min % V
[7] Trip reset	Press ⌄ and ⌄ at the same time.	CAU r/min % V ⇨ 0 r/min % V 00

Description of operation	Digital key pad		
	Switch	LED display	
[8] Speed setting	Press ⌃	0 r/min % V 00 Flashing	• Internal speed (0-th speed) is displayed (setting at 0 r/min).
	Press ⌃ to set a speed.	1800 r/min % V 00 Flashing	• Set the Internal speed setting (0-th speed) at 1800 r/min.
[9] Reset to monitor mode.	Press MODE	0 r/min % V 00	• Data is still stored if power is cut off here.
[10] Operation instruction	Press RUN	1800 r/min % V r	· Display of rotation speed changes little by little toward 1800 r/min • Display of rotation direction* ("r" indicates that the motor is rotating CW.)
[11] Stop instruction	Press STOP	0 r/min % V 00	• Display of rotation speed changes little by little toward 0 r/min.
[12] Power OFF			

<Checkpoint in Test run>

(1) Check whether the motor rotates smoothly. Check for abnormal noise and vibration.

(2) Check whether the motor is accelerated and decelerated smoothly.

(3) Rotation direction and rotation speed of the motor are matched?

* Rotation direction of gear head output shaft may sometimes be reversed due to reduction gear ratio when gear head is installed.

* Rotation direction can also be changed by use of "I2". See " **33** I1/I2 function selection" (2) on P.57.

■ Setting is still stored when power is turned off. When operating the motor with Digital key pad only in trial run, either reset the setting or initialize parameters after completion of trial run. (Parameter **54**)

Here, note that all parameters return to default when parameters are initialized.

How to copy parameter

1. Reading a parameter value from brushless amplifier to the Digital key pad.

• Once parameters are read into the console, their details are stored in the Digital key pad.

Description of operation	Digital key pad	
	Switch	LED display
[1] Turn on power		0 / 00
[2] Call " **57** parameter copy"	Press DATA SET Hold down ⊕ to choose parameter **57**.	Parameter value / 00 Flashing ⇨ n0 / 57 Flashing
[3] P.LOAd Choose reading a parameter into the Digital key pad.	Press DATA SET Press ⊕ twice to choose P.LOAd .	n0 / 57 Flashing ⇨ P.LoAd / 57 Flashing
[4] Read a parameter into the Digital key pad.	Press DATA SET for 1 second while holding down STOP .	P.LoAd / 57 Flashing→Slow flashing (once per second)
[5] Wait about 30 seconds.		P.End
[6] Reading of parameter into the Digital key pad completed	Press STOP	0 / 00

2. Copy a parameter value saved in the Digital key pad onto the brushless amplifier.

Description of operation	Digital key pad	
	Switch	LED display
Turn on power. Call " **57** parameter copy". (Same operation as 1. [1] and [2])		
[1] P.PrOC Choose writing a parameter to the brushless amplifier.	Press DATA SET Press ⊕ three times to choose P.PrOC .	n0 / 57 Flashing ⇨ P.PrOC / 57 Flashing
[2] Write a parameter to the brushless amplifier.	Press DATA SET for 1 second while holding down STOP.	P.PrOC / 57 Flashing→Slow flashing (once per second)
[3] Wait about 10 seconds.		P.End
[4] Completion of writing a parameter from the Digital key pad to the brushless amplifier.		CAU
[5] Reset to monitor mode.	Press ⊕ and ⊖ at the same time for clear trip.	0 / 00

Error while copying a parameter

P.Err1 : Data is abnormal while copying.
→ Press STOP switch for clearing, and then copy data again. If data is still abnormal, initialize the Digital key pad and retry.

P.Err2 : Copy error
→ This error occurs in an attempt to copy data between products of different function. Press STOP switch for clear.
Parameters can be copied between the same models, but parameters should be copied between the same output in principle because gain setting is different.

How to copy parameter

3. Initializing of data of Digital key pad.

• When any trouble occurs during copying, it can be often solved by initializing the Digital key pad. (Stored data is cleared by initializing.)

Description of operation	Digital key pad	
	Switch	LED display
Turn on power and call " **57** parameter copy". (Same operation as 1. [1] and [2])		
[1] P.In IT Choose initialization of data of Digital key pad.	Press DATA SET Press ⌃ once and choose P.In IT .	n0 r/min % V → P.In IT r/min % V 57 Flashing → 57 Flashing
[2] Initialization of Digital key pad.	Press DATA SET for 1 second while holding down STOP.	P.In IT r/min % V Flashing→ Continuous lighting 57 LED display changes from flashing to continuous lighting during initializing operation.
[3] Wait about 30 seconds.		P.End r/min % V
[4] Initializing of data of Digital key pad completed	Press STOP	0 r/min % V 00

• Do not turn off power or disconnect the cable of Digital key pad during operation such as "Reading a parameter from the brushless amplifier to the Digital key pad", "Copying a parameter value stored in the Digital key pad to the brushless amplifier", and "Initializing the data of Digital key pad".

List of parameters (Default)

Outline of parameters

Brushless amplifier of this series is equipped with various parameters for adjustment and setup to characteristics and functions. Amplifier in optimum condition for your running requirements.

Composition of parameters and list of default

Parameter No.	Name of parameter	Parameter setting			
		Setting range	Minimum unit	Default	Check*1
00	Internal speed (0-th speed)	0 to " **3b** Upper speed limit"	1 r/min	0	
01	1st speed			3000	
02	2nd speed			1200	
03	3rd speed			600	
04	4th speed			0	
05	5th speed			0	
06	6th speed			0	
07	7th speed			0	
10	1st acceleration time	0.01 to 300 sec: to 3 sec : Incremented by 0.01 second; 3 sec to 30 sec : Incremented by 0.1 second; 30 sec to 300 sec : Incremented by 1 second		0.05	
11	2nd acceleration time			2.00	
12	1st deceleration time			0.05	
13	2nd deceleration time			2.00	
14	Acceleration mode selection	L In Linear S-1 S shape-1 *2 S-2 S shape-2 *2		L In	
15	Deceleration mode selection			L In	
16	Stop mode selection	FrEE Free-run stop dEC Speed reduction stop		dEC	
17	Free-run waiting time	0.0 to 10.0 sec	0.1 sec	1.0	
1A	Velocity loop proportional gain	0 to 10000	1	400	
1b	Velocity loop integration gain	0 to 10000	1	500	

*1 When parameter marked with "**C**" in the check column is changed and stored, the unit is tripped for safety. It is not allowed to change them while the motor is running.

*2 Select this when " **31** Speed command selection" is PnL (PANEL).

List of parameters (Default)

Parameter No.	Name of parameter	Parameter setting			
		Setting range	Minimum unit	Default	Check*1
30	Run command selection	PnL. RUN and STOP of Digital key pad rEr I1/I2*3		rEr	C
31	Speed command selection	PnL. " **00** Internal speed (0-th speed)" UoL-A FIN*4 UoL-F Speed setting knob		UoL-F	C
32	Operation mode selection	1 1st speed operation mode 2 2nd speed operation mode 4 4th speed operation mode 8 8th speed operation mode		1	C
33	I1/I2 function selection *5	F-r [I1: CCW run/stop I2: CW run/stop] r-F [I1: CW run/stop I2: CCW run/stop] rS.Fr [I1: run/stop I2: CW run/ CCW run] F-rSr [I1: CCW run/stop I2: Trip reset] r-rSr [I1: CW run/stop I2: Trip reset]		rS.Fr	C
34	I3 function selection	FrEE Free run rHr External forced trip U-d 2nd acceleration / deceleration rSr Trip reset		FrEE	C
35	I4 function selection			rSr	C
36	I5 function selection			FrEE	C
3A	Lower speed limit	0 to " **3b** Upper speed limit"	1 r/min	0	C
3b	Upper speed limit	0 to 4000 r/min	1 r/min	3000	C
3C	Torque limit	0 to 150	1%	150	

*1 When parameter marked with "**C**" in the check column is changed and stored, the unit is tripped for safety. It is not allowed to change them while the motor is running.
*3 Corresponds to RUN switch on the front panel or signal input.
*4 Corresponds to the analogue voltage speed setting.
*5 To change the functions of I1 and I2 from the factory setting, change the I1 input enabled switch (SW3) on the back of the product to "ON", set the front RUN switch to "RUN" and the rotate direction selector switch to "CCW".

Parameter No.	Name of parameter	Parameter setting			
		Setting range	Minimum unit	Default	Check*1
40	O1 function selection	Tr1P Trip SrbL Arriving rUn Running FrEE Free-run F CCW run r CW run Ct-L Overload detection POUT Speed pulse signal *6		Tr1P	
41	O2 function selection			POUT	
42	O1 output polarity selection	nOr Normal polarity rEU Reverse polarity		nOr	
43	O2 output polarity selection				
44	Speed matching range	20 to " **3b** Upper speed limit"	1 r/min	50	
45	Output pulse count selection	1, 2, 3, 4, 6, 8, 12, 24 *7		24	
46	Monitormode selection	0.-r Rotation speed (Actual speed) 0.-L Torque reference *8 AU.-L Load factor *9 S.-r Command speed dC-U Internal DC voltage		0.-r	
47	Numerator of display magnification factor	1 to " **48** Denominator of display magnification factor" × 10	1 time	1	

*1 When parameter marked with "**C**" in the check column is changed and stored, the unit is tripped for safety. It is not allowed to change them while the motor is running.
*6 Rotation angle of a motor is divided into the number set up by Pr45, and a pulse is outputted at the division position. By using an analog filter, it is a signal for checking a near speed in analog meter etc.Since there are no hysteresis characteristics, and there is possibility of the incorrect detection by disturbance or motor vibration, please do not use it for position detection.
*7 Select 12 or less, When you need exceeding 3000 r/min.
*8 Torque reference: 100 % corresponding to approximately rated torque. By calculating the load factor based on this, it is intended to protect motor thermal damage, so accuracy can not be guaranteed. Please use as a reference value.
*9 Load factor: The value obtained by multiplying the torque reference by the first-order lag filter

List of parameters (Default)

Parameter No.	Name of parameter	Parameter setting			
		Setting range	Minimum unit	Default	Check*1
48	Denominator of display magnification factor	1 to 1000	1 time	1	
4A	Trip history clear	nO No operation YES Clear trip history		nO	
4b	Trip history 1	–		–	
4C	Trip history 2			–	
4d	Trip history 3			–	
4E	Trip history 4			–	
4F	Trip history 5			–	
50	Undervoltage trip selection	nO No trip YES Trip		nO	C
51	Retrial selection	nO ,1 to 4		nO	C
52	Retrial start time	1 to 120 sec	1 sec	5	
54	Parameter initializing	nO No operation YES Initialize to default		nO	
57	Parametercopy function	nO No copying of parameter P.InIT Initializing the data of Digital key pad P.LOAd Reading a parameter to the Digital key pad P.PrOG Writing a parameter to brushless amplifier		nO	
F0	For manufacturer use	–		–	

*1 When parameter marked with "**C**" in the check column is changed and stored, the unit is tripped for safety. It is not allowed to change them while the motor is running.

LED display

LED display

Figures displayed on the 7 segment display of the Daigital key pad are shown below:

Alphanumeric	LED display	Alphanumeric	LED display
A	A	S	5
B	b	T	r
C	C	U	U
D	d	V	U
E	E	Y	y
F	F	0	0
G	G	1	1
H	H	2	2
I	I	3	3
K	k	4	4
L	L	5	5
N	n	6	6
O	o, O*	7	7
P	P	8	8
Q	q	9	9
R	r		

Example of LED display

Example

Description in the text	Display on Diqtal key pad
PnL	PnL
TEr	rEr
FrEE	FrEE
rST	rSr

* LED display of "O" is available in two types.

Example

Description in the text	Display on Diqtal key pad
VoL-A	UoL-A
nO	nO

The function of parameters

Parameter No.	Name of parameter	Description
00	Internal speed (0-th speed)	Desired running speed can be set. This is effective when " **31** Speed command selection" is PnL (PANEL). Upper limit is limited by " **3b** Upper speed limit".
01 to 07	1st speed to 7th speed	Speed in multi-speed running can be set. It is effective when " **32** Operation mode selection" is set to 2-speed operation mode.
10	1st acceleration time	Set the upper limit and lower limit as shown in the right figure on the acceleration time setter and deceleration time setter under the front panel. • **Set the time to change speed by 1000 r/min** • The set time unit are 0.01 second for 3 seconds or less, 0.1 seconds for 3 seconds to 30 seconds, and 1 second for 30 seconds or more 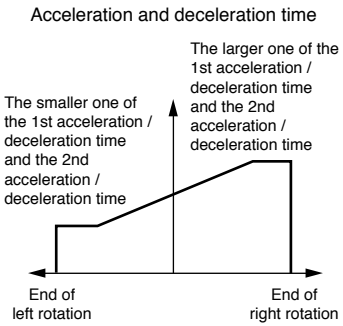
11	2nd acceleration time	
12	1st deceleration time	
13	2nd deceleration time	
14	Acceleration mode selection	Straight line acceleration/deceleration and curve (S-shape) acceleration and deceleration can be chosen individually for acceleration and deceleration. Select S-shape when " **31** Speed command selection" is PnL (PANEL). LIn LINEAR 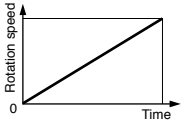 Straight line up to speed setting. Standard mode for accelerating and decelerating. S-1 "S" SHAPE-1 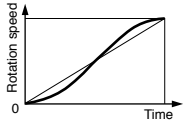 Straight line up to speed setting. Standard mode for accelerating and decelerating. S-2 "S" SHAPE-2 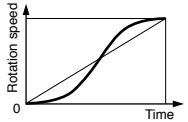 Relaxes the speed change in start and end of acceleration and deceleration.
15	Deceleration mode selection	

Parameter No.	Name of parameter	Description
16	Stop mode selection	You can select how to stop the motor. FrEE (FREE) Power supply to the motor is cut off and the motor is stopped naturally when stop command is input (free-run stop). It takes longer for the motor to completely stop when load inertia is big. dEC (DECEL) When stop command is input, the motor reduces its speed according to preset deceleration time, Electric-brake is performed by Zero-speed control, and then power is cut off to the motor after elapse of time set by " **17** Free-run waiting time", and the motor is set in free-run state. **<Example or running pattern in deceleration stop>** • The motor is servo-rocked in Zero-speed control. (Electrically controlled so that motor speed is Zero) 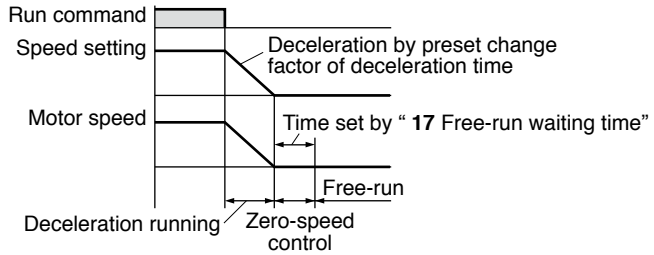
17	Free-run waiting time	When " **16** Stop mode selection" is set to dEC (DECEL) deceleration stop, servo lock time (Zero-speed control) after deceleration can be adjusted. (Free-run state is set after that.)
1A	Velocity loop proportional gain	Enables setting of proportional gain of velocity amplifier. When this value is made greater, gain is increased, which improves responsiveness of the motor. When this value is made too large, operation is vibratory. In order to smoothly rotate at low speed, it may be necessary to adjust the parameter " **1A** speed loop proportional gain" larger in the actual load condition of the actual machine. If you are using it even at high speed operation, be careful as vibration increases at high speed operation if the gain is increased. Setting range: 0 to 10000, Setting resolution: 1
1b	Velocity loop integration gain	Enables setting of integration gain of velocity amplifier. When this value is made greater, gain is increased, which improves rigidity of the motor (strength of servo lock). When this value is made too large, overshooting becomes greater, and the motor is vibratory. Setting range: 0 to 10000, Setting resolution: 1

The function of parameters

Parameter No.	Name of parameter	Description
30	Run command selection	Run command can be chosen from the following: PnL (PANEL): Command the motor to stop with switch of Digital key pad. The motor cannot be operated by RUN switch on the front of product or signal input "I1" and "I2". Signal input is effective only in setting rotation direction, etc. See " **33** I1/I2 function selection". rEr (TERMINAL): RUN command is issued with the RUN switch on the front of the product or with the signal inputs "I1" and "I2". When commanding with the "I1" signal input, turn SW3 on the back of the product ON and use the RUN switch on the front of the product to RUN to use. When commanding with "I2" signal input by setting the parameter with " **33** I1 / I2 function selection", set the rotate direction selector switch to CCW.
31	Speed command selection	It is possible to select whether the 0th speed command setting is performed with the front speed setting knob, " **00** setting speed (0th speed)", or speed setting input "FIN" PnL (PANEL): " **00** setting speed (0th speed)" VoL-A (VOL-A): speed setting input "FIN" (analog voltage speed setting) VoL-F (VOL-F): speed setting knob
32	Operation mode selection	Parameter for choosing operation mode

Setting	Operation made	Function of signal input		
		I3	I4	I5
1	1st speed operation mode		Free-run stop External forced trip 2nd acceleration/deceleration time Trip reset	
2	2nd speed operation mode	Speed setting		
4	4th speed operation mode	Speed setting	Speed setting	
8	8th speed operation mode	Speed setting	Speed setting	Speed setting

(1) 2nd speed operation mode

I3	Setting to be chosen
OFF	Speed setting knob, internal speed (0-th speed) or FIN
ON	1st speed

" **32** Operation mode selection" Continued to the next page.

Parameter No.	Name of parameter	Description
32	Operation mode selection	(2) 4th speed operation mode

I3	I4	Setting to be chosen
OFF	OFF	Speed setting knob, internal speed (0-th speed) or FIN
ON	OFF	1st speed
OFF	ON	2nd speed
ON	ON	3rd speed

(3) 8th speed operation mode

I3	I4	I5	Setting to be chosen
OFF	OFF	OFF	Speed setting knob, internal speed (0-th speed) or FIN
ON	OFF	OFF	1st speed
OFF	ON	OFF	2nd speed
ON	ON	OFF	3rd speed
OFF	OFF	ON	4th speed
ON	OFF	ON	5th speed
OFF	ON	ON	6th speed
ON	ON	ON	7th speed

33 — I1/I2 function selection *2

(1) For setting "I1" or "I2" function

F-r (FORWARD-REVERSE)

State of I1 and I2		Action
I1	I2	
OFF	OFF	Stop Deceleration stop when "**16** Stop mode selection" is dEC
ON	OFF	CCW run
OFF	ON	CW run
ON	ON	Free-run stop Trip reset (which must be retained 0.2 sec or longer) *1

r-F (REVERSE - FORWARD)

State of I1 and I2		Action
I1	I2	
OFF	OFF	Stop Deceleration stop when "**16** Stop mode selection" is dEC
ON	OFF	CW run
OFF	ON	CCW run
ON	ON	Free-run stop Trip reset (which must be retained 0.2 sec or longer) *1

" **33** I1/I2 function selection" Continued to the next page.

*1 Effective only when trip occurs

*2 When using the I1 input, turn on the I1 input enable switch (SW3) on the back of the product and set the RUN switch on the front of the product to RUN.
When using the I2 input, set the CCW / CW switch on the front of the product to CCW.

Parameter No.	Name of parameter	Description
33	I1/I2 function selection *2	

r S.F r (RUNSTOP. FORWARD-REVERSE)

State of I1 and I2		Action
I1	I2	
OFF	OFF	Stop Deceleration stop when "16 Stop mode selection" is d E C
ON	OFF	CCW run
OFF	ON	Stop Deceleration stop when "16 Stop mode selection" is d E C
ON	ON	CW run

F - r S T (FORWARD-TRIP RESET)

State of I1 and I2		Action
I1	I2	
OFF	—	Stop Deceleration stop when "16 Stop mode selection" is d E C
ON	—	CCW run
—	ON	Trip reset (which must be retained 0.2 sec or longer) *1

r - r S T (REVERSE-TRIP RESET)

State of I1 and I2		Action
I1	I2	
OFF	—	Stop Deceleration stop when "16 Stop mode selection" is d E C
ON	—	CW run
—	ON	Trip reset (which must be retained 0.2 sec or longer) *1

" 33 I1/I2 function selection" Continued to the next page.

*1 Effective only when trip occurs
*2 When using the I1 input, turn on the I1 input enable switch (SW3) on the back of the product and set the RUN switch on the front of the product to RUN.
When using the I2 input, set the CCW / CW switch on the front of the product to CCW.

Parameter No.	Name of parameter	Description
33	I1/I2 function selection *2	

(2) When " 30 Run command selection" is P n L (PANEL), the motor can be commanded with RUN STOP switch of Digital key pad.
Rotation direction in this case can be set by parameter and "I1" "I2" state. "I1" "I2" are off when only Digital key pad is connected.

F - r (FORWARD-REVERSE)

State of I1 and I2		Action
I1	I2	
OFF	OFF	CCW rotation selection
ON	OFF	
OFF	ON	CW rotation selection
ON	ON	Free-run stop irrespective of RUN switch Trip reset (which must be retained 0.2 sec or longer) *1

r - F (REVERSE-FORWARD)

State of I1 and I2		Action
I1	I2	
OFF	OFF	CW rotation selection
ON	OFF	
OFF	ON	CCW rotation selection
ON	ON	Free-run stop irrespective of RUN switch Trip reset (which must be retained 0.2 sec or longer) *1

r S.F r (RUNSTOP. FORWARD-REVERSE)

State of I1 and I2		Action
I1	I2	
—	OFF	CCW rotation selection
—	ON	CW rotation selection

F - r S T (FORWARD-TRIP RESET)
CCW run with RUN switch

State of I1 and I2		Action
I1	I2	
—	ON	Trip reset (which must be retained 0.2 sec or longer) *1

" 33 I1/I2 function selection" Continued to the next page.

*1 Effective only when trip occurs
*2 When using the I1 input, turn on the I1 input enable switch (SW3) on the back of the product and set the RUN switch on the front of the product to RUN.
When using the I2 input, set the CCW / CW switch on the front of the product to CCW.

The function of parameters

Parameter No.	Name of parameter	Description
33	I1/I2 function selection *2	r-rSt (REVERSE-TRIP RESET) CW run with RUN switch State of I1 and I2: I1 — / I2 ON → Action: Trip reset (which must be retained 0.2 sec or longer) *1
34 **35** **36**	I3 function selection I4 function selection I5 function selection	The function of signal input I3 can be individually selected as follows: FrEE (FREE) : ON (shorted between signal I3 and "COM") → Free-run stop instruction THr (THERMAL) : OFF (open between signal I3 and "COM") → External forced trip instruction • Before setting, short-circuit I3 to "COM". Open circuit will cause tripping. U-d (UP-DOWN): ON (shorted between signal I3 and "COM") → 2nd acceleration/deceleration time rSt (RESET) : ON (open between signal I3 and "COM") → Trip reset instruction The functions that can be selected with signal inputs I3, I4, and I5 are changed to speed setting selection according to the setting value of " **32** operation mode selection". Set value of "32 operation mode selection": 1 — 1st speed operation mode; I3: Free-run stop, External forced trip; I4: 2nd acceleration/deceleration time, Trip reset; I5: — 2 — 2nd speed operation mode; I3: Speed setting; I4: 2nd acceleration/deceleration time, Trip reset; I5: — 4 — 4th speed operation mode; I3: Speed setting; I4: Speed setting; I5: — 8 — 8th speed operation mode; I3: Speed setting; I4: Speed setting; I5: Speed setting
3A	Lower speed limit	Set the lower limit of the motor setting speed. For example, when " **31** Speed command selection" is analogue speed instruction VoL-A (VOL-A), motor setting speed at 0 V input is set. Speed instruction value Upper speed limit Lower speed limit 0 0.5 4.5 5 V Input voltage

*1 Effective only when trip occurs
*2 When using the I1 input, turn on the I1 input enable switch (SW3) on the back of the product and set the RUN switch on the front of the product to RUN.
When using the I2 input, set the CCW / CW switch on the front of the product to CCW.

Parameter No.	Name of parameter	Description
3b	Upper speed limit	Set the upper limit of the motor setting speed. For example, when " **31** Speed command selection" is analogue voltage speed setting VoL-A (VOL-A), motor setting speed at 5 V input is set. Further, upper limit of " **00** Internal speed (0-th speed)" and " **01** 1st speed" to " **07** 7th speed" and " **44** Speed matching range" is limited by this parameter.
3C	Torque limit	Set the upper limit of motor output torque with torque reference. (Since the torque is not controlled, there is no precision, please use as a guide.) It represents the rated torque equivalent with the torque reference 100 %. There is a different offset between the torque reference and the output torque depending on the motor. Specification of torque reference - output torque (Representative characteristic) Output torque [%] 150 100 0 0 50 100 150 [%] Torque reference
40 **41**	O1 function selection O2 function selection	Output terminal "O1" and "O2" can also be selected as follows. Polarity of " **40** O1 function selection" and " **41** O2 function selection" can be inverted by " **42** O1 output polarity selection" and " **43** O2 output polarity selection" TrIP (TRIP) : Trip signal (Trip: ON) StbL (STABLE) : Arriving signal (Speed is reached to a command value ON) → See " **44** Speed matching range". rUn (RUN) : Run/Stop signal (When running: ON) FrEE (FREE) : Free-run signal (During free run: ON) F (FORWARD) : CCW run signal (During CCW run: ON) r (REVERSE) : CW run signal (During CW run: ON) Ct-L (CHECK-L) : Overload detection Output when load exceeds 100% (Load exceeds 100%:ON) POUt (PULSE-OUT): Speed pulse signal → See " **45** Output pulse count selection".
42 **43**	O1 output polarity selection O2 output polarity selection	This is a function for inverting the polarity of signal output between output terminal "O1" "O2" and "COM". nOr (NORMAL) : Transistor "ON" when activated rEU (REVERSE) : Transistor "OFF" when activated

The function of parameters

Parameter No.	Name of parameter	Description
44	Speed matching range	When " **40** O1 function selection" and " **41** O2 function selection" are chosen to [StbL] (STABLE) Arriving signal, "Speed matching range" for output arriving signal can be adjusted. • When difference between actual rotation speed and speed setting is smaller than "Speed matching range", arriving signal is output. • Even if the speed is reached, when speed matching range is set too small, arriving signal may turn on and off due to speed fluctuation. • Arriving signal is not output when CCW/CW changes.
45	Output pulse count selection	When " **40** O1 function selection" and " **41** O2 function selection" are set to [POUT] (PULSE-OUT), pulse count is set to be output to "O1" "O2" while the motor makes one turn. (To be selected from 1, 2, 3, 4, 6, 8, 12, and 24) • Select 12 or less, When you need exceeding 3000 r/min. 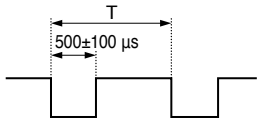 (Ex) When rotation number is 3000 r/min, in the case where " **45** Output pulse selection" is 24, $T = \frac{60}{3000 \times 24} = 0.83$ ms Frequency f = 1/T = 1.2 kHz Rotation angle of a motor is divided into the number set up by Pr45, and a pulse is outputted at the division position. By using an analog filter, it is a signal for checking a near speed in analog meter etc. Since there are no hysteresis characteristics, and there is possibility of the incorrect detection by disturbance or motor vibration, please do not use it for position detection.
46	Monitor mode selection	You can choose description to be displayed on 5-digit LED when turning on power. [O.-r] (OUTPUT-REVOLUTION) : Rotation speed [O.-L] (OUTPUT-LOAD) : Torque reference [AU.-L] (AVERAGE-LOAD) : Load factor (average of torque reference) [S.-r] (SETTING-REVOLUTION) : Speed command [dC-U] (DC-VOLTAGE) : Internal DC voltage (Voltage of smoothing capacitor of power supply) In speed display mode, the value multiplied by " **47** Numerator of display magnification factor" / " **48** Denominator of display magnification factor" is displayed.

Parameter No.	Name of parameter	Description
47	Numerator of display magnification factor	You can set the multiplying factor of a value displayed on 5-digit LED. Value of **47** ÷ **48** is a display multiplying factor. Set a value in the range where calculated display magnifying factor is 10 to 1/1000. Rotation number of gear output shaft and the speed of line can be displayed. When the display magnifying factor is changed, the parameter relating to speed (below) is displayed by a value multiplied by display multiplying factor. " **00** Internal speed (0-th speed)" " **01** 1st speed" " **3A** Lower speed limit" " **3b** Upper speed limit" " **44** Speed matching range"
48	Denominator of display magnification factor	
4A	Trip history clear	Trip history 1 to 5 can be cleared. **<Clear procedure>** Cut off power with [YES] (YES) selection, and turn on power again after display has disappeared, then [- - - - -] is displayed, and trip history is cleared. When power is turned on again, normal operation is started. **(Caution)** It can not be cleared during RUN command input.
4b **4C** **4d** **4E** **4F**	Trip history 1 Trip history 2 Trip history 3 Trip history 4 Trip history 5	Trip history for 5 times in the past is stored. Trip history 1 is the latest history. See "Protective function" for displayed description. When no history is available, [- - - - -] is displayed.
50	Undervoltage trip selection	When [nO] (NO) is selection, the motor is not tripped at insufficient voltage. If voltage should fall and undervoltage status is found while the motor is running, the motor stops after running free, while if operation instruction is input after recovery of power, the motor is restarted automatically. (• Be cautious.) When [YES] (YES) is selection, the motor is tripped at undervoltage, and alarm LED blinks. When normal power is off, trip is not stored in trip history. Trip is stored only when power has stopped instantaneously (Trip is stored in trip history only when undervoltage once becomes short and then is recovered normal)

Parameter No.	Name of parameter	Description
51	Retrial selection	Automatic reset in trip (trip retrial) can be set here. Trip can be is automatically reset to allow operation to continue. Use this function only on such equipment that has no problem of safety even if the motor is automatically restarted. • Retrial is impossible if trip is by Overcurrent error E-OC, Sensor error E-CS, System error Err, User parameter error E-UPr, or System parameter error E-SPr. When n0 (NO) is selection, retrial is not effective. When 1 to 4 is selection, retrial is made for the set number of times. When 2 hours has elapsed with no trip, the number of retrying times is initialized to 0. Set the interval between retrials by " **52** Retrial start time". When trip occurs in excess of preset number of trials, the brushless amplifier outputs trip signal and stops. • During retrial, trip signal is not output (It is stored in trip history)
52	Retrial start time	You can set waiting time until retrial operation is performed after tripping is found. You can set 1 to 120 seconds.
54	Parameter initializing	Parameters can be initialized to the factory default. **<Initializing procedure>** Cut off power with YES (YES) selection, and turn on power again after display has disappeared, then ----- is displayed, and parameters are initialized to the factory default.
57	Parameter copy	Parameters can be copied. n0 (NO) Parameters are not copied P.InIT (PARAMETER-INITIALIZE): Initialization of Digital key pad data P.LOAd (PARAMETER-LOAD): Reading parameters into Digital key pad data P.PrOG (PARAMETER-PROGRAM): Writing parameters to the brushless amplifier See the copying method of parameters on P.44 for detail
F0	For manufacturer use	It cannot be changed.

Outline of PANATERM for BL

Communicating software "PANATERM for BL" can do the following thing.

(1) Setting and saving of parameters of brushless amplifier and writing setting to memory EEPROM.
(2) Monitor of input/output signals, monitor of a load factor.
(3) The present trip display and reference of a trip history.
(4) Data measurement of waveform graphics, and the call of preservation data.

Example of an operation pattern

When using the I1 input, turn on the I1 input enable switch (SW3) on the back of the product and set the RUN switch on the front of the product to RUN.
When using the I2 input, set the CCW / CW switch on the front of the product to CCW.

• Example of running pattern by use of 2nd acceleration / deceleration time.
When you choose " **32** Operation mode selection" at 1 : 1st speed operation mode, choose " **33** I1/I2 function selection" at r5.Fr : (RUNSTOP, FORWARD-REVERSE), and choose " **34** I3 function selection" at U-d : 2nd acceleration and deceleration time.

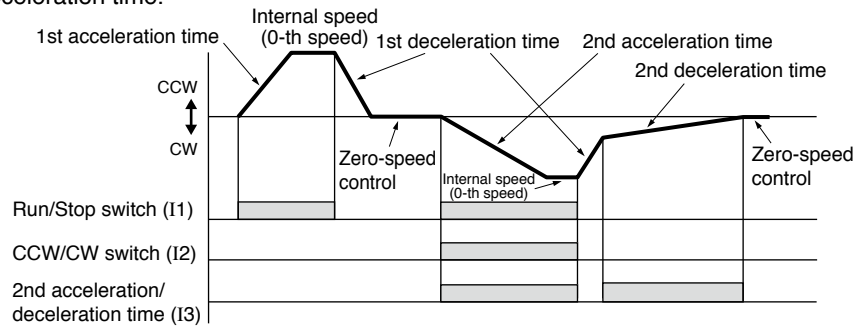

• Example of operation pattern in 2nd speed operation mode
When you choose " **32** Operation mode selection" at 2 : 2nd speed operation mode, "I3" is choosing of speed setting, and works as follows:

I3	Speed setup
OFF	Internal speed (0-th speed) or FIN
ON	1st speed

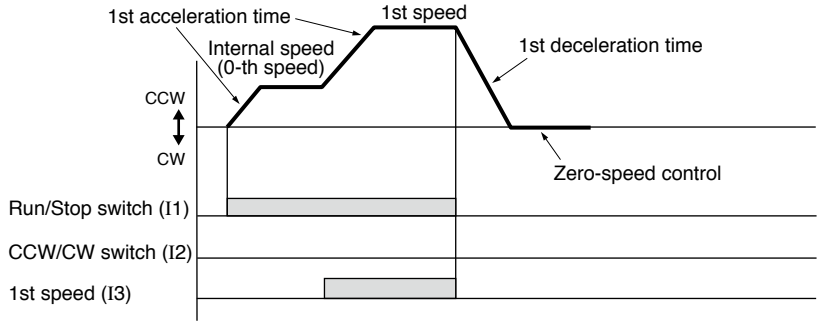

Conformance to EC directive and UL standard

EC Directives

This brushless amplifier realizes compliance with the relevant standard of low voltage directive in order to facilitate conformity to the EC directive of the machinery and equipment to be incorporated.

EMC Directives

Brushless amplifiers are not intended for general home use or connection to low-voltage public communication lines. Connecting to such a circuit may cause radio frequency interference.
This brushless amplifier decides the model such as installation and wiring, and it conforms to the relevant standard of the EMC directive in that model. Wiring conditions, grounding conditions, etc. may not be the same as those of the model in the state where it is incorporated in actual machinery / equipment. Therefore, as for compliance with the EMC directive in machinery / equipment, it is necessary to measure with the final machinery / equipment incorporating this product (especially Radiated Emissions, Conducted Emissions etc.).

Applicable standard

	Applicable standard		Installation condition
UL	UL61800-5-1	Standard for Adjustable Speed Electrical Power Drive Systems - Part 5-1: Safety Requirements -Electrical, Thermal and Energy	Class I equipment Pollution degree 2 *1
CSA	C22.2 No. 274	Adjustable speed drives	
European Communities Directive	Low Voltage Directive EN61800-5-1	Adjustable speed electrical power drive systems	Overvoltage category II Class I equipment Pollution degree 2 Group 1, Class A EMI Category C3 2nd environment
	EMC Directive EN55011	Industrial, scientific and medical (ISM) radio-frequency equipment – Electromagnetic disturbance characteristics	
	EN61000-6-2	Electromagnetic compatibility (EMC). Immunity for industrial environments	
	EN61000-6-4	Electromagnetic compatibility (EMC) Emission standard for industrial environments	
	EN61800-3	Adjustable speed electrical power drive systems. EMC requirements and specific test methods	
Korea Certification Mark	Korea Radio Law *2	Class A Instrument (commercial broadcast communications equipment)	—

*1 SCCR: 5,000 rms symmetrical amperes, 240 Volts maximum.
The branch circuit protection shall be limited to any Class of Listed fuse with a maximum let-through current of 700 A.
Integral solid state short circuit protection does not provide branch circuit protection. Branch circuit protection must be provided in accordance with the National Electrical Code and any additional local codes.
(These devices are not provided with motor over-temperature sensing.)

*2 Information related to the Korea Radio Law
A 급 기기 (업무용 방송통신기자재) 이 기기는 업무용(A 급) 전자파적합기기로서 판매자 또는 사용자는 이 점을 주의하시기 바라며, 가정외의 지역에서 사용하는 것을 목적으로 합니다. (대상기종 : BRUSHLESS AMPLIFIER)

This brushless amplifier is a Class A
commercial broadcasting radio wave generator not designed for home use. The user and dealer should be aware of this fact.

Configuration of peripheral equipment

Power supply	· 100 V system: Single phase 100 V to 120 V ± 10 %, 50 Hz/60 Hz 200 V system: Single phase 200 V to 240 V ± 10 %, 50 Hz/60 Hz · Use the equipment under the environment of overvoltage category II specified by IEC60664-1. · In order to obtain overvoltage category III, insert a transformer conforming to EN standard or IEC standard to the input of brushless amplifier. · Use an electric wire size suitable to EN60204-1.
MCCB (breaker) Fuse	Install molded circuit breaker (MCCB) specified by IEC standard and UL certification between power supply and noise filter. The branch circuit protection shall be limited to any Class of Listed fuse with a maximum let-through current of 700 A. Integral solid state short circuit protection does not provide branch circuit protection. Branch circuit protection must be provided in accordance with the National Electrical Code and any additional local codes.
Noise filter	When installing one noise filter at the power supply for more than one brushless motor used, contact the manufacturer of noise filter.
Surge absorber	Install a surge absorber on the primary side of noise filter. However, in performing the voltage resistance test of machine and equipment, be sure to remove the surge absorber; otherwise, the surge absorber may be ruptured.
Grounding	Be sure to connect the grounding Terminal of brushless amplifier and protective grounding wire (PE) of system for preventing electric shock. Do not tighten the grounding wires together but connect them individually.

Wiring of peripheral equipment

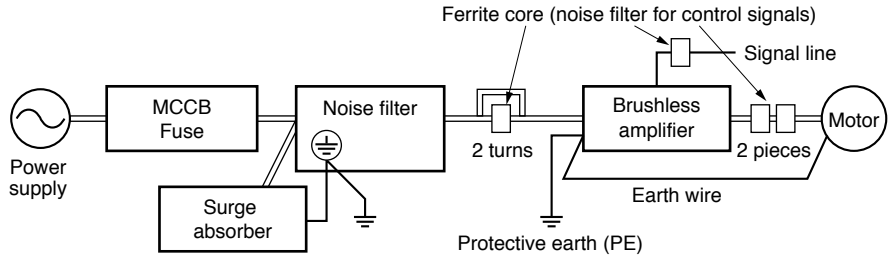

Conformance to EC directive and UL standard

List of compatible peripheral equipment

Part name	Optional parts number (option)	Manufacturer's parts number	Qty.	Manufacturer
Noise filter (single phase 100, 200 V)	DV0P4170	SUP-EK5-ER-6	1	Okaya Electric Industries Co. Ltd.
Noise filter (3-phase)	DV0PM20042	3SUP-HU10-ER-6	1	
Surge absorber (single phase 100, 200 V)	DV0P4190	R·A·V-781BWZ-4	1	
Surge absorber (3-phase)	DV0P1450	R·A·V-781BXZ-4	1	
Noise filter for control signals	DV0P1460	ZCAT3035-1330	4	TDK Corporation

Noise filter

• DV0P4170

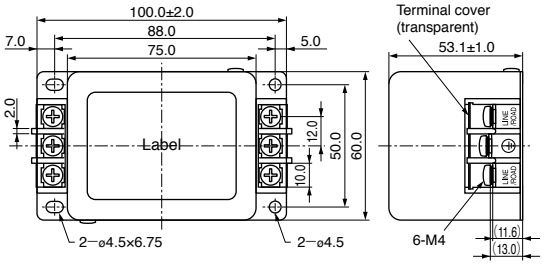

[Unit: mm]

• DV0PM20042

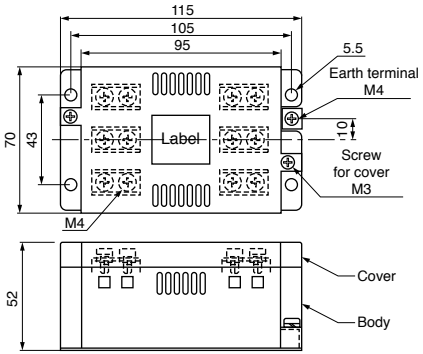

Surge absorber

• DV0P4190

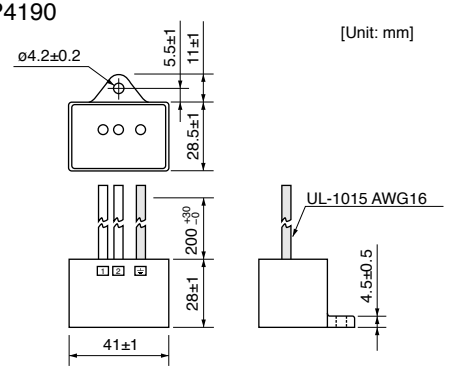

[Unit: mm]

Circuit diagram

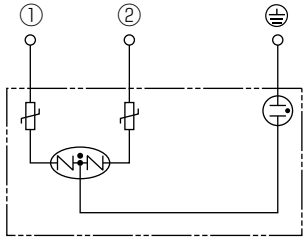

• DV0P1450

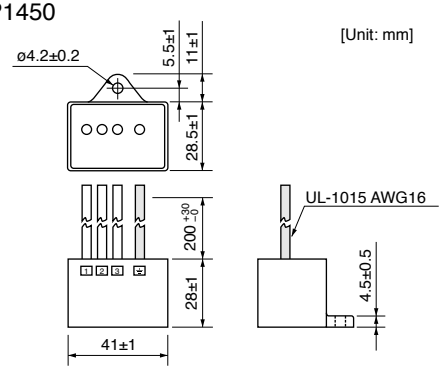

[Unit: mm]

Circuit diagram

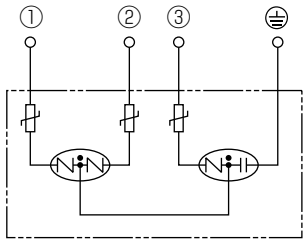

Ferrite core (Noise filter for control signals)

• DV0P1460

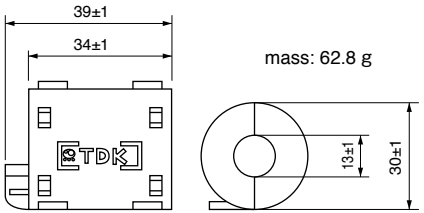

mass: 62.8 g

[Unit: mm]

Recommended circuit breaker (MCCB)

Made by Sensata Technologies Japan Limited:

Type IELH-1-11-63-5A-M (single phase) Type IELH-1-111-63-5A-M (3-phase)

(Rated current 5A, cutoff characteristics DELAY63)

• Recommended cutoff characteristics: DELAY61-63

Specifications

• Brushless motor specifications

Item	Specifications					
Flange size	80 mm sq.		90 mm sq.			
Motor model No.	MBMU5AZA○		MBMU9A1A○	MBMU9A2A○	MBMU1E1A○	MBMU1E2A○
Motor rated output (W)	50		90		130	
Voltage	for 100 V/200 V		for 100 V	for 200 V	for 100 V	for 200 V
Rated torque (N·m)	0.16		0.29		0.41	
Starting torque *1 (N·m)	0.24		0.43		0.62	
Rated input current (A(rms))	0.53	0.53	1.00	0.50	1.30	0.72
Moment of inertia of rotor (×10^{-4}kg·m^2)	0.12		0.27		0.36	
Rating	Continuous					
Rated rotation speed *2 (r/min)	3000					
maximum rotation speed (r/min)	4000					
Speed control range (r/min)	30 to 4000					
Axial runout	0.05 mm or less at the position of 3 mm from the shaft end					
Bearing	Ball bearing					
Insulation resistance	Measure the insulation resistance with 500 V Megger. It must be above 20 MΩ Measuring position: Between power input line (L1, L2,L3) and grounding wire					
Isolation voltage	1500 VAC, 1 minute, 10 mA or less (between power and grounding wire)					
Ambient temperature	–10 °C to +40 °C (free from freezing) * Ambient temperature is measured at a distance of 50 mm from the motor.					
Ambient humidity	20 to 85% RH (free from condensation)					
Altitude	Lower than 1000m					
Vibration	4.9 m/s^2 or less (10 to 60 Hz) X, Y, Z					
Impact	Lower than 98m/s^2					
Motor insulation class	130(B) (UL certified 105 (A))					
Storage temperature	–20 ˚C to 65 ˚C (free from condensation) Maximum temperature guarantee: 80 °C 72 hours					
Storage humidity	85%RH or below (free from condensation)					
Protection structure	IP65*3					
Number of poles	8					
Motor mass (kg)	0.7		1.0		1.2	

*1 Representative value
*2 Motor shaft speed: to be multiplied by the reduction ratio when the gear head is used.
*3 Excluding the shaft pass-through section and cable end connector.
* Should conform to the test conditions specified in EN standard (EN60529 and EN60034-5). Not suitable for application where watertightness is required over a prolonged period, even if frequently washed.

• Standard characteristics measurement conditions are temperature of 25 °C and relative humidity of 65%, and may be extended to 5 to 35 °C and 45 to 85% RH.

• Brushless amplifier GU series specifications

Item		Specifications								
Basic Specifications	Amplifier model No.	MBEU5A1AAV	MBEU5A5AAV		MBEU9A1AAV	MBEU9A5AAV		MBEU1E1AAV	MBEU1E5AAV	
	Applicable motor model No.	MBMU5AZA○			MBMU9A1A○	MBMU9A2A○		MBMU1E1A○	MBMU1E2A○	
	Motor rated output (W)	50			90			130		
	Input power supply voltage (V)	Single phase 100 to 120	Single phase	3-phase	Single phase 100 to 120	Single phase	3-phase	Single phase 100 to 120	Single phase	3-phase
			200 to 240			200 to 240			200 to 240	
	Frequency (Hz)	50/60								
	Rated input current (A)	1.5	0.7	0.35	2.2	1.1	0.5	2.8	1.5	0.7
	Rated output current (A)	0.6			1.1	0.6		1.4	0.8	
	Voltage tolerance	±10 %								
	Control method	Speed control by CS signal Driving system by PWM sine wave								
Ambient conditions	Ambient temperature	0 °C to +40 °C (free from freezing) * Ambient temperature is measured at a distance of 50 mm from the amplifier.								
	Ambient humidity	20 % to 85 % RH (free from condensation)								
	Atmosphere	Indoor (without corrosive gas, dirt, dust, etc.)								
	Altitude	Lower than 1000 m								
	Vibration	5.9 m/s^2 or less (10 Hz to 60 Hz)								
	Storage temperature	–20 ˚C to 65 ˚C (free from condensation) Maximum temperature guarantee: 80 °C 72 hours								
	Storage humidity	20 % to 85 % RH or below (free from condensation)								

<Note>
To start/stop the motor, use RUN switch on the front of the product or signal inputs (I1, I2, etc.).
If power is turned on/off to start/stop the motor, the life of the internal circuitry will be shortened.

Specifications

• Brushless Amplifier GU series specifications (continued)

Item			Specifications
Function	Speed setting		Analogue voltage: DC 0 V to 5 V, Digital *1
	Speed setting Resolution		Analogue voltage: About 1/ 200 of Upper speed limit Digital: 1 r/min
	Speed setting precision (at 20°C)		Speed setting knob: 34 % to 60 % of the upper limit speed in the center setting Analog voltage speed setting: 3 % of the upper limit speed Digital speed setting: 1 r/min (motor shaft rotation speed)
	Acceleration/ Deceleration time		0.01 sec to 300 sec (Time for changing from 0 r/min to 1000 r/min) *1
	Stopping procedure		Speed reduction stop / Free-run stop *1
	Operation mode		8 speed
	Signal input		5 inputs *2 (run/ stop, CW run/ CCW run, multi function 3 bit)
	Signal output		2 outputs (Open collector) *2 (Trip output etc)
	Change parameter/ Monitor of condition		Parameter change, status monitor, etc., can be executed through a store-bought PC: (Communication software "PANATERM for BL", Digital key pad connection cable (DV0P383**) and PC connection cable (DV0P4140) are required. The PC should be provided with RS232 port or RS232-USB convertor.)
			Parameter change, status monitor, etc., can be executed through the optional Digital key pad DV0P3510 (sold separately). (Digital key pad connection cable (DV0P383**) (option, sold separately) is required.)
	Speed fluctuation factor	With load	±1 % or below (at 0 to Rated torque, Rated rotation speed)
		With voltage	±1 % or below (at supply voltage ±10 %, rated rotation speed)
		With temperature	±1 % or below (at 0 °C to 50 °C, rated rotation speed)
	Protective function		Warning : Undervoltage *3 , Overload, setting change. Protect : Undervoltage *3 , Overload, Overcrrent, Overvoltage, Overheat, Overspeed, Sensor error, External forced trip, User parameter error, System parameter error, System error.
Performance	Rated rotation speed		3000 r/min
	Speed control range		30 r/min to 4000 r/min (Speed ratio 1:133) *4
	Allowable motor cable extension length		Up to 10 m (Panasonic option cable)
	Protection level		115 %/ Overload protection time characteristics 150% 60 sec
Insulation resistance			Measure the insulation resistance with 500 V Megger. It must be above 20 MΩ. Measuring position: Between power input line (L1, L2, L3) and grounding wire.
Isolation voltage			1500 VAC, 1 minute, 10 mA or less (between power and grounding wire)
Protection structure/ Cooling system			Equivalent to IP20 /Self cooling
Amplifier mass (kg)			0.38

*1 Can be set by using the optional Digital key pad DV0P3510 (sold separately) or PANATERM for BL.
*2 Function of signal input and signal output can be changed by using the optional Digital key pad (sold separately) or PANATERM for BL.
*3 By using the optional Digital key pad DV0P3510 (sold separately) or PANATERM for B, Undervoltage warning (operation is stopped without trip, and started again as the voltage is recovered) can be changed to Undervoltage error (operation is maintained with trip).
*4 In order to smoothly rotate at low speed, it may be necessary to adjust the parameter " **1A** speed loop proportional gain" larger in the actual load condition of the actual machine.
If you are using it even at high speed operation, be careful as vibration increases at high speed operation if the gain is increased.

• Speed-torque characteristic (Torque in short-time run area is a typical value.)

MBEU5A1AAV／MBMU5AZA○
MBEU5A5AAV／MBMU5AZA○

50 W 100V

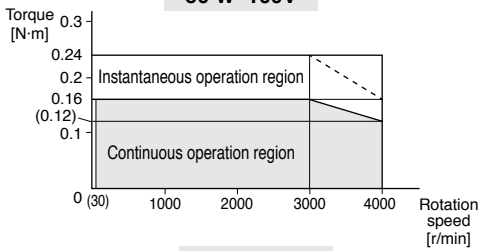

MBEU9A1AAV／MBMU9A1A○
MBEU9A5AAV／MBMU9A2A○

90 W 100V

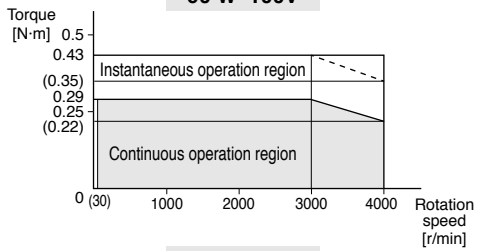

50 W 200V

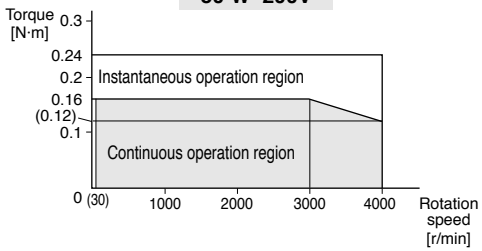

90 W 200V

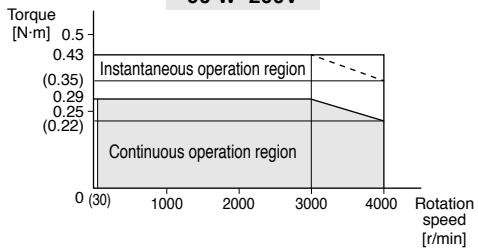

MBEU1E1AAV／MBMU1E1A○
MBEU1E5AAV／MBMU1E2A○

130 W 100V

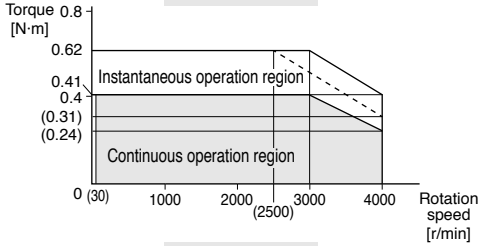

130 W 200V

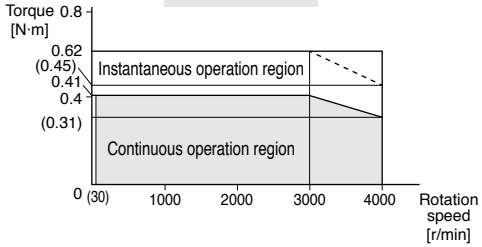

<Note>

1. Instantaneous operation region is a typical value.
2. Dashed line represents the torque when power supply voltage falls 10%.
3. "○" at the end of the model number of the motor indicates the specification of the motor shaft.

Specifications

Dimensions [Unit: mm]

• Motor

50 W

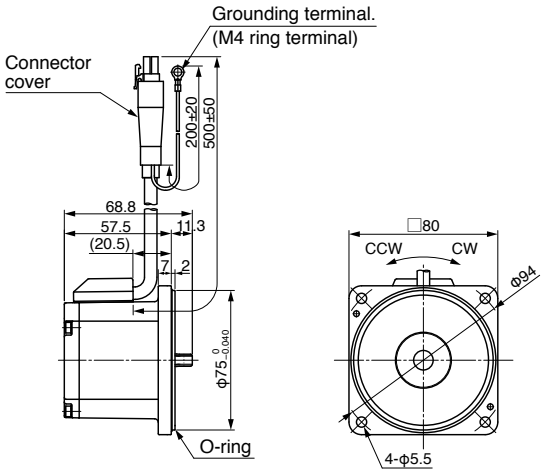

Round shaft type

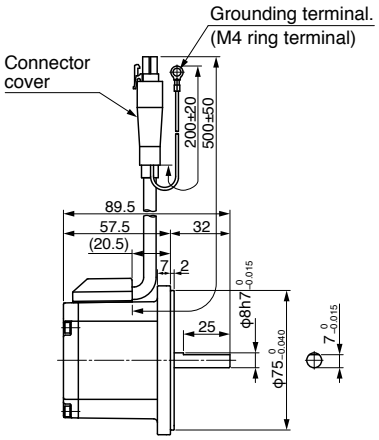

90 W/130 W

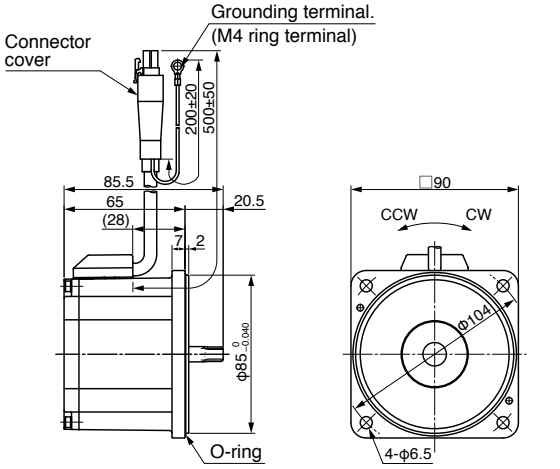

Round shaft type

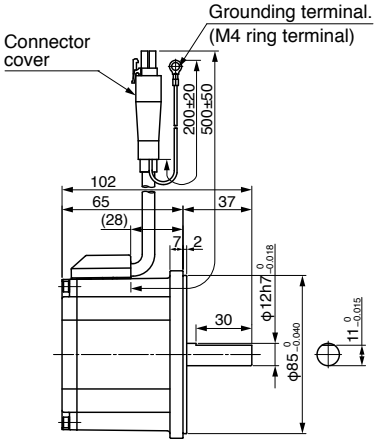

• Gear head

MX8G□B
(for 50W motor, option)
- A figure representing reduction ration in □ .
- Reduction ratio
  3, 3.6, 5, 6, 7.5, 9, 10
  12.5, 15, 18, 20, 25
  30, 36, 50, 60, 75, 90
  100, 120, 150, 180
  22 types

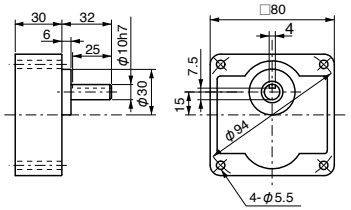

Key and keyway [attachment]

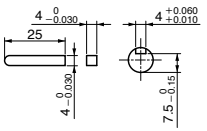

MZ9G□B/MY9G□B
(for 90W,130W motors, option)
- A figure representing reduction ration in □ .
- Reduction ratio
  3, 3.6, 5, 6, 7.5, 9, 10
  12.5, 15, 18, 20, 25
  30, 36, 50, 60, 75, 90
  100, 120, 150, 180, 200
  23 types

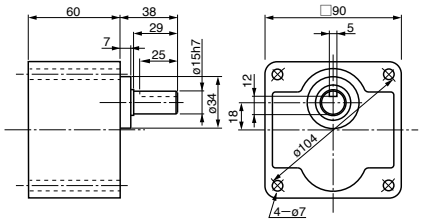

Key and keyway [attachment]

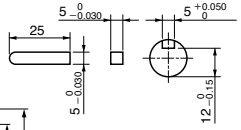

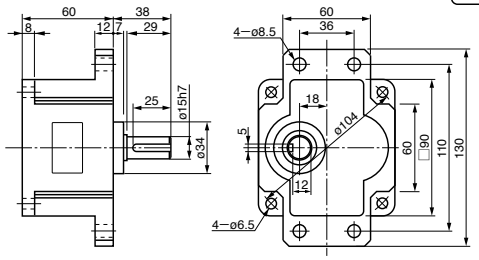

• Brushless Amplifier

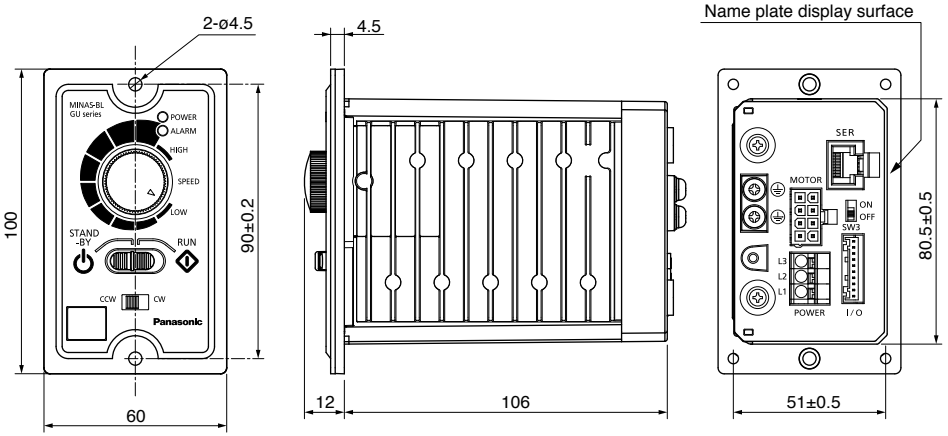

[unit: mm]

Options

• Console A

DV0P3500

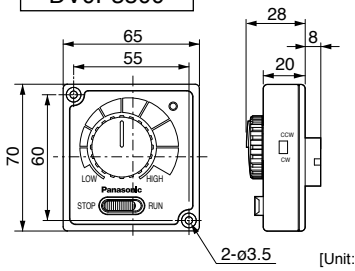

• Digital key pad

DV0P3510

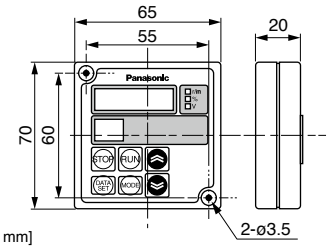

Mounting hole side

(Console A, Digital key pad)

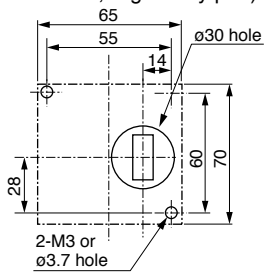

Console A connector terminal symbol

Terminal No.	1	2	3	4	5	6	7	8	9	10
Terminal name	I1	I2	COM	FIN	+5V	—	—	—	—	—

Digital key pad connector terminal symbol

Terminal No.	1	2	3	4	5	6	7	8	9	10
Terminal name	—	—	COM	—	+5V	—	SCK	SIN	SOT	—

Console A, Digital key pad connector pin No.

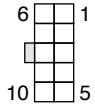

• Console A connection cable

Optional parts number	Length (L)
DV0PM2006910	1 m
DV0PM2006930	3 m
DV0PM2006950	5 m

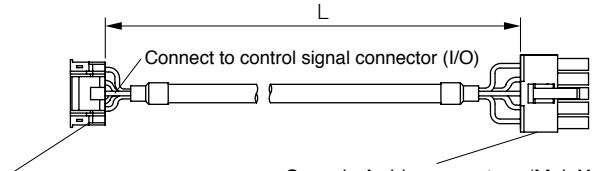

<Control signal connector I/O side> (J.S.T Mfg.Co.,Ltd.)
Housing : PAP-10V-S : PAP-10V-S
Terminal : SPHD-002T-P0.5

<Console A side connector> (MoleX.)
Housing : 39-01-2105(5557-10R-210)
Terminal : 39-00-0046(5556T2)
or
39-00-0047(5556T2L)

Terminal No. of I/o terminal	1	2	3	4	5	6	7	8	9	10
Lead color of a cable	Brown	Red				Orange	Yellow	Green		
Console A side connector pin No.	1	2	—	—	—	3	4	5	—	—

• Digital key pad connection cable

Optional parts number	Length (L)
DV0P38310	1 m
DV0P38330	3 m
DV0P38350	5 m

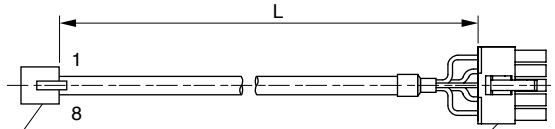

Brushless amplifier side connector (modular plug RJ45)
Connected to (SER)

<Digital key pad side connector>
(MoleX.)
Housing : 39-01-2105(5557-10R-210)
Terminal : 39-00-0046(5556T2)
or
39-00-0047(5556T2L)

Terminal No. of SER connector	1	2	3	4	5	6	7	8
Terminal name	—	+5V	SOT	SIN	—	—	COM	SCK
Digital key pad side connector pin No.	—	5	9	8	—	—	3	7

Please do not modify the cable.

• Motor extension cable

Optional parts number	Length (L)
DV0PQ1000110	1 m
DV0PQ1000130	3 m
DV0PQ1000150	5 m
DV0PQ10001A1	10 m

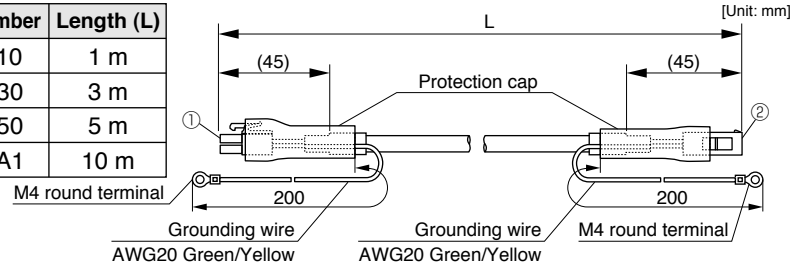

• **Accessories**
- Insulating cap (for grounding wire insulation) 1
- M4 × 6 pan head screw with spring washer 1
- M4 hex. nut 1

Insulating cap
(for grounding wire insulation)

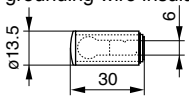

①Brushless amplifier side connector (MoleX.)
Connector : 39-01-2085
Connector pin : 39-00-0038 or 39-00-0039(for AWG 20)
39-00-0046 or 39-00-0047(for AWG 26)

②Motor side connector (MoleX.)
Connector : 39-01-2086
Connector pin : 39-00-0040 or 39-00-0041(for AWG 20)
39-00-0048 or 39-00-0049(for AWG 26)

- When using motor extension cable, be sure to connect its grounding wire to the grounding wire of the motor, and connect the other end of grounding wire of the extension cable to the earth terminal of the brushless amplifier.
  For connecting grounding wire of motor and motor extension cable, use M4 screw and insulating cap supplied as accessories.
- Do not connect multiple extension cables.

• PC connection cable (10-pin D-sub connector pin 1.5 m)

Optional parts number	Length (L)
DV0P4140	1.5 m

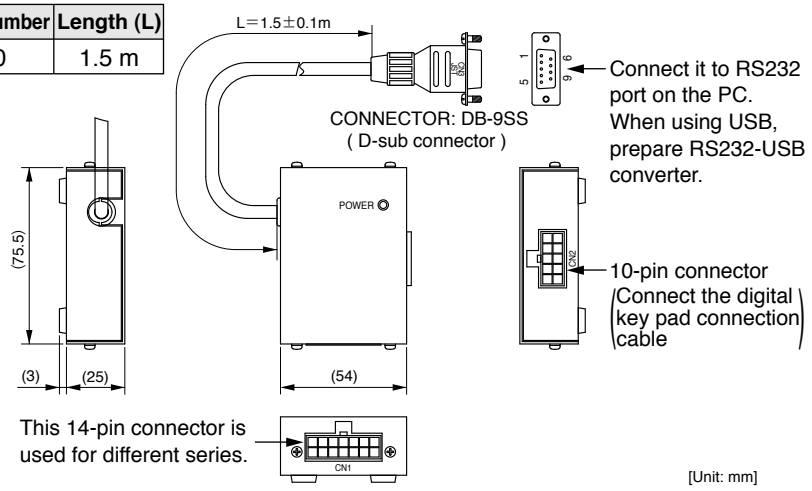

• Communication software "PANATERM for BL"

Can be downloaded from our web site, free of charge.
industrial.panasonic.com/ac/e/

Options

• Control signal cable (Cable with an I/O connector)

Optional parts number	Length (L)
DV0PM20076	2 m

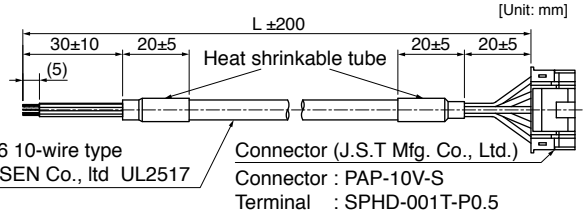

Terminal number and lead wire color

Terminal number	1	2	3	4	5	6	7	8	9	10
Terminal symbol	I1	I2	I3	I4	I5	COM	FIN	+5 V	01	O2
Wire color	Brown	Red	Orange	Yellow	Green	Blue	Purple(Pink)	Gray	White	Black

• I/O connector kit

Optional parts number	Name	Manufacturer's parts No.	Qty.	Manufacturer	Note
DV0PM20070	Connector	PAP-10V-S	1	J.S.T Mfg.Co.,Ltd.	Fits to I/O connector
	Connector pin	SPHD-002T-P0.5	10		

• PAP-10V-S

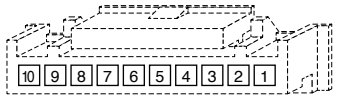

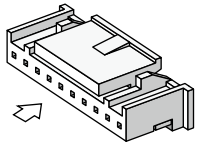

• External speed setter

Optional parts number
DV0PM20078

5 kΩ B characteristic 1/4 W

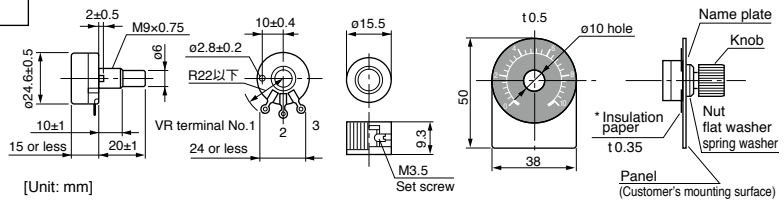

* Insert the insulation paper to positively isolate the terminals and chassis.
• Nuts, flat washer, spring washer are attached.

• Panel connector kit (Fits to Console A)

Optional parts number	Name	Manufacturer's parts No.	Qty.	Manufacturer	Note
DV0P3610	Connector	39-01-2105(5557-10R-210)	1	Molex Inc	Fits to Console A
	Connector pin	39-00-0047(5556T2L)	10		

• 39-01-2105（5557-10R-210）

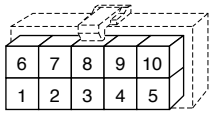

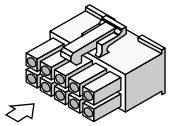

• Reactor

Fig.1(for 3-phase power supply)

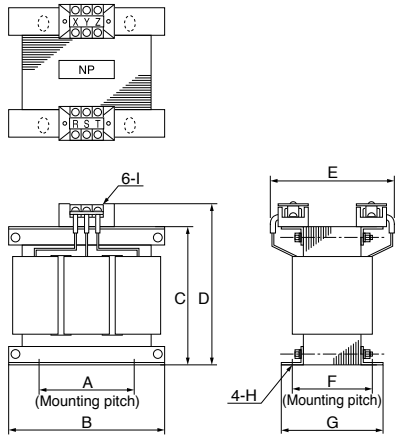

Applicable crimp terminal

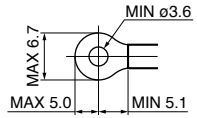

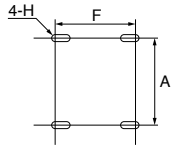

F: Center-to-center distance on outer circular arc

Fig.2 (for single phase power supply)

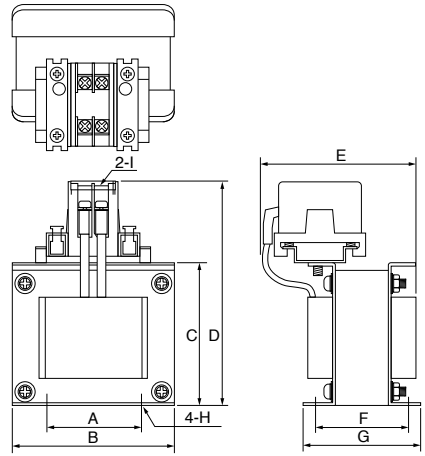

Applicable crimp terminal

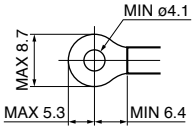

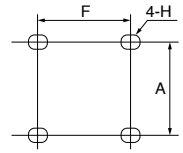

F: Center-to-center distance on slotted hole

[Unit: mm]

	Optional parts number	A	B	C	D	E (Max)	F	G	H	I	Inductance (mH)	Rated current (A)
Fig.1	**DV0P220**	65±1	125±1	(93)	136Max	155	70+3/–0	85±2	4-ϕ7×12	M4	6.81	3
Fig.2	**DV0P227**	55±0.7	80±1	66.5±1	110Max	90	41±2	55±2	4-ϕ5×10	M3.5	4.02	5

<Remarks>

When using a reactor, be sure to install one reactor to one brushless amplifier.

• Wiring of the reactor

<3-Phase 200 V>

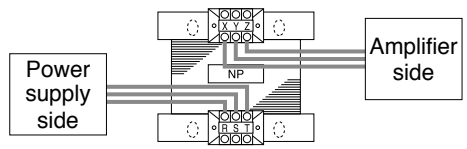

<Single phase 100, 200 V>

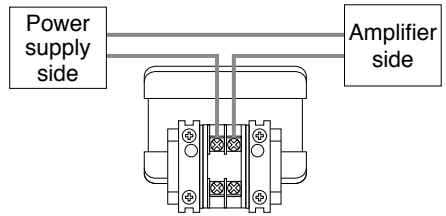

When selecting a reactor, refer to the rated input current (A) in "Brushless Amplifier GU Series specifications" on page 69.

Options

• O-ring

Repair parts
10 pcs packed in one bag.

Size (mm)	Part number
80 sq.	**DV0PN10008**
90 sq.	**DV0PN10009**

List of Peripheral Equipments

Manufacturer	Tel No. / Home Page	Peripheral components
TDK Corporation	+81-3-5201-7229 http://www.tdk.co.jp/	Noise filter for signal lines
Okaya Electric Industries Co. Ltd.	+81-3-4544-7040 http://www.okayatec.co.jp/	Surge absorber Noise filter
Sensata Technologies Japan Limited	+81-49-283-7575 www.sensata.com/japan	Circuit breaker (MCCB)
Japan Molex Inc.	+81-462-65-2313 http://www.molex.co.jp	Connector
J.S.T. Mfg. Co., Ltd.	+81-45-543-1271 http://www.jst-mfg.com/index_i.html	
Iwaki Musen Kenkyusho Co., Ltd.	+81-44-833-4311 http://www.iwakimusen.co.jp/	Regenerative resistor

* This list is for reference only and subject to change without notice.

Cautions for Proper Use

Cautions for Proper Use

- Precautions for exporting this product and equipment incorporating this product.
  Practical considerations for exporting the product or assembly containing the product. When the end user of the product or end use of the product is associated with military affair or weapon, its export may be controlled by the Foreign Exchange and Foreign Trade Control Law. Complete review of the product to be exported and export formalities should be practiced.
  Please be careful in matching with our products when changing the specifications of the customer's machine.
- This product is intended to be used with a general industrial product, but not designed or manufactured to be used in a machine or system that may cause personal death when it is failed.
- Customers should check matching of standards, compliance with laws and regulations in finished equipment, and structure, dimensions, lifespan, characteristics, etc., with customers' mounting equipment and parts.
- Parts are subject to minor change to improve performance.
- Install a safety equipments or apparatus in your application, when a serious accident or loss of property is expected due to the failure of this product.
- Application of exceptionally larger external noise disturbance and static electricity, or failure in input power, wiring and components may result in unexpected action. It is highly recommended that you make a fail-safe design and secure the safety in the operative range.
- When this product is operated without the shaft electrically grounded, such as in driving the fan, bearing noise may become higher due to the occurrence of electro corrosion depending on the motor used or setting emvironment, so confirm and verify the condition on the customer side in such a case.
- Failure of this product depending on its content, may generate smoke of about one cigarette. Take this into consideration when the application of the machine is clean room related.
- Since there is a possibility that noise resistance performance may be influenced by the wiring situation (earth grounding method, cable length, shielding status of signal line), etc., please check the noise immunity of the customer's completed equipment as well.
- Please do not remove the nameplate.
- Please be careful when using in an environment with high concentrations of sulfur or sulfidizing gas, as sulfuration can lead to disconnection from the chip resistor or a poor contact connection.
- Take care to avoid inputting a supply voltage which significantly exceeds the rated range to the power supply of this product. Failure to heed this caution may result in damage to the internal parts, causing smoking and/or a fire and other trouble.

After-Sale Service (Repair)

Repair

Consult to a dealer from whom you have purchased the product for details of repair. When the product is incorporated to the machine or equipment you have purchased, consult to the manufacuter or the dealer of the machine or equipment.

Technical information

Technical information of this product (Instruction Manual, CAD data) can be downloaded from the following web site.
industrial.panasonic.com/ac/e/

Pursuant to at the directive 2004/108/EC,article 9(2)

Panasonic Testing Centre
Panasonic Marketing Europe GmbH
Winsbergring 15,22525 Hamburg,F.R.Germany

For your records:
The model number and serial number of this product can be found on either the back or the bottom of the unit. Please note them in the space provided and keep for future reference.

Model No.	MBEU □□□ AAV MBMU □□□ A □		**Serial No.**	
Date of purchase				
Dealer	Name			
	Address			
	Phone	( ) -		

Motor Business Unit, Panasonic Corporation
7-1-1 Morofuku, Daito, Osaka, 574-0044, Japan Phone : +81-72-871-1212
「© Panasonic Corporation 2018」
IMF02
P0818-0