Panasonic
INDUSTRY

LP-M

The 3D fiber laser system is especially suited for metal processing.

Information about the laser marking system series LP-M

Highlights

- 3D marking
- Automatic distance measuring
- High degree of protection IP64
- Integrated z-axis control
- Measuring laser power

Specifications

Item / Model		Standard	Large marking field	Standard	Large marking field	Standard
		LP-M200-LS1	LP-M205-LS1	LP-M500-LS1	LP-M505-LS1	LP-MA00-LS1
Marking laser		Fiber laser λ = 1064nm, laser class 4				
Guide laser		Semiconductor λ = 655nm, laser class 2, output class 1mW				
Output class		20W		50W		100W
Marking field		120mm x 120mm	220mm x 220mm	120mm x 120mm	220mm x 220mm	120mm x 120mm
Work distance		190mm	220mm	190mm	220mm	190mm
3D marking area (Z axis control)		44mm (±22mm)				
Scan method		Galvano scanner				
Scan speed (max.)		12000mm/s				
Line speed (max.)		170m/min				
Workpiece positioning		Stationary and on-the-fly marking				
Fiber cable length		5m				
Net weight	Laser head	12kg				
	Controller	28kg				35kg
Degree of protection (laser head)		IP64				

Dimensions

LP-M laser head

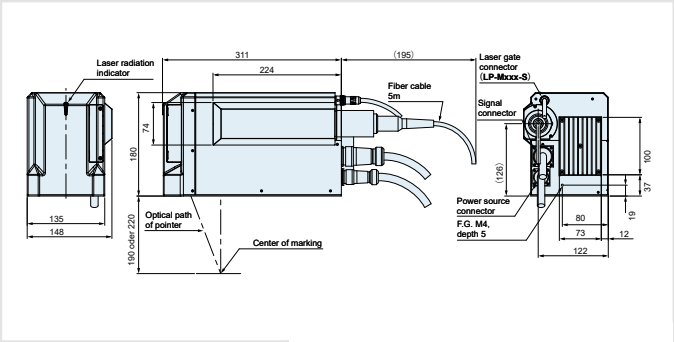

Type	Work distance (mm)	Marking field (mm²)
LP-MX00-LS1-C	190	120 x 120
LP-MX05-LS1-C	220	220 x 220

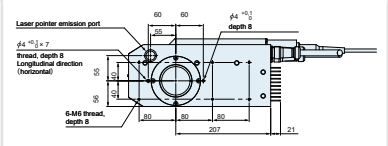

LP-M / LP-MA controller

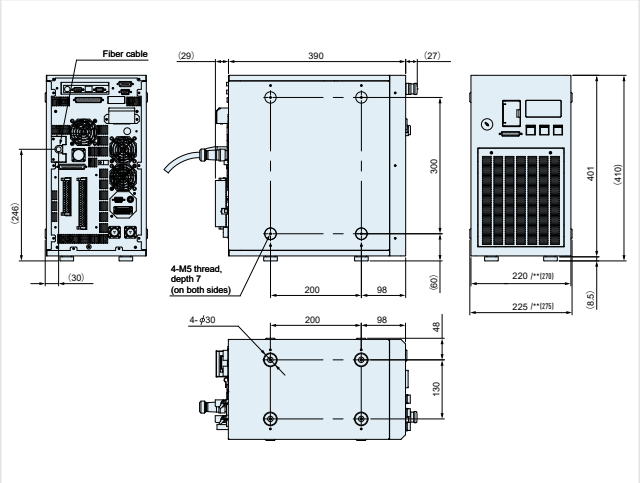

* All measurements in mm
** Dimensions for LP-MA Controller

Panasonic

More information on:
www.laser.panasonic.eu

Copyright © 2021
Printed in Germany • 3250euen 10/21